FORM-A -- OFFEROR IDENTIFICATION & AUTHORIZED SIGNATORY
(DO NOT handwrite this Form. Information must be typed in.)

Invitation No.: EM06-19

Invitation Title: Earth Moving and Construction Equipment

Offeror Company: Humdinger Equipment, Ltd.
(Legal name of business which will appear on contract, if awarded)

Offeror Status: [X] **Manufacturer** [X] **Dealer/Distributor** [ ] **Other**

Response Type(1): [X] **Single Offeror Acting Alone Or As Lead** [ ] **Multiple Offerors Acting Jointly**

Contract Signatory(2): Chad Phares **Title:** Vice President

Mailing Address(3): P.O. Box 64865 | Lubbock | Texas 79464
Street/PO Box | City | State & Zip

Physical Address: 3202 Clovis Road | Lubbock | Texas 79415
Street | City | State & Zip

Phone: 806-771-9944 **Fax:** 806-771-9945

Email Address: chad@humdingerequipment.com

Federal Tax ID No.: 20-2192410 **Web Page URL:** www.humdingerequipment.com

(1) If Joint Offering, all parties must submit a signed Form A. A contract will be offered to each.
(2) Person who will sign final contract documents if an award is made.
(3) Address to which final contract documents would be sent for signature.

Member Contact Information

Contact Person(4): Chad Phares **Title:** Vice President

Mailing Address: P.O. Box 64865 | Lubbock | Texas 79464
Street/PO Box | City | State & Zip

Physical Address: 3202 Clovis Road | Lubbock | Texas 79415
Street | City | State & Zip

Toll Free Phone: 888-999-4909 **Fax:** 806-771-9945

Email Address: chad@humdingerequipment.com

(4) Person who End Users will contact for product information and to get pricing quotes.

The Signatory below, on behalf of Offeror:

- Acknowledges having thoroughly reviewed the Invitation;
- Attests to having the authority to sign this response and commit Offeror to honor all requirements;
- Makes, under penalty of perjury, all required Offeror Certifications as detailed in General Terms;
- Certifies that all information provided in this Response is true and correct.

Signature: _____ **Title:** Vice President

Printed Name: Chad Phares **Date:** 1-25-2019

FORM-B -- HISTORICALLY UNDERUTILIZED BUSINESS ENTERPRISES **Procurement No.:** EM06-19

Title: Earth Moving and Construction Equipment

Offeror: Humdinger Equipment, Ltd.

Most, if not all, of the Members of HGACBuy are subject to various requirements relative to purchasing goods and services from Historically Underutilized Business Enterprises (HUBs)(See Note 1). These requirements are promulgated by federal and state governmental authorities, and include measureable criteria such as 'percentage of total dollars spent directed to HUBs', 'number of HUB contractors used', 'HUB subcontractors employed by primary contractors', etc. These requirements are generally formalized in goal oriented programs.

HGACBuy is comitted to promoting full and equal business opportunities for HUB contractors, and to assisting Cooperative Purchasing Program (COOP) Members in meeting mandated HUB goals. In that regard, Contractor shall make a good faith effort to use the services of Certified/Listed (See Note 2) HUBs whenever possible.

As part of a good faith effort, Contractor agrees to work with and assist HGACBuy Members in meeting HUB targets and goals, as may be required by any rules, processes or programs they might have in place. Such assistance may include such things as compliance with reporting requirements, provision of documentation, consideration of 'Certified/Listed' subcontractors, provision of documented evidence that an active participatory role for a HUB entity was considered in a procurement transaction, etc.

Note 1: There are many designations other than "HUB" used across the country within various jurisdictions. Examples include terms such as Disadvantaged Business Enterprise (DBE), Minority Owned Business Enterprise (MBE), Woman Owned Business Enterprise (WBE), Small Disadvantaged Business (SDB), Small, Woman or Minority-owned Business (SWAM), etc. Regardless of the formal designation, the overall objective of the relavant programs is basically the same, i.e. to insure that disadvantaged and underutilized members of the business community receive a fair share of public spending. The term HUB as used herein shall be understood to encompass all such programs/business enterprises, no matter what terminology is used by the Member.

Note 2: The terms "Certified" and "Listed" as used in conjunction with HUB programs relate to the process of HUB qualification review. Jurisdictions usually require that companies claiming HUB status be reviewed and confirmed as meeting certain minimum requirements to claim that status, and that the review and confirmation process be carried out by certain designated entities. They are then "Certified" or "Listed" by having their name included on an official listing published by the Certifying or Listing Authority.

Accepted and Agreed By:	
Title: Vice President	Date: 1-25-19

HUB Status Of Offeror

☐ Offeror is a HUB, as detailed below. ☒ Offeror is not a HUB.

Designation(s): ☐ HUB ☐ DBE ☐ MBE ☐ WBE ☐ Other

Certifying/Listing Authority(s):

Subcontracts

On a separate sheet, list any subcontractors that would be employed in providing products or services related to this procurement. Include subcontractor name, designation (HUB, DBE, etc.) and certifying/listing authority.

☐ Subcontractor List attached. ☒ No Subcontractors will be used.

FORM-C -- RESPONSE CHECKLIST	Procurement No.: EM06-19

Title: Earth Moving and Construction Equipment

Offeror: Humdinger Equipment, Ltd.

This form is provided to help insure that all required Response elements have been completed and included, or certified as being available upon request. **Responses that do not comply with all requirements may be considered non-compliant.** Offeror's signatory must review each item below, and certify by initialing in the space to the right.

	This Response Includes:	Initials
1	An "Original" hard copy of the **COMPLETE** submission, including all required *FORMS*, plus one copy, each in a separate **hard-sided** 3-ring binder.	
2	A copy of the **COMPLETE** submission, including all required *FORMS*, **in electronic format (flash drive)**. The electronic copy of bid shall include ALL docucments included in the printed copies. The submitted version of this H-GAC forms packet shall be presented in its original unaltered Excel format	
3	For each product code/line items (i.e. Form-D), a copy of the complete catalog and list price book /sheets in both printed and electronic media	
4	An originally signed **Form-A** from all entities who are party to this submission and who should be offered a contract if this submission is successful.	
5	The required list of **References**.	
6	Details of "**Service Organization"**, including locations, hours, personnel and parts/service availability. (Applies to hard goods only.)	
7	Complete **Warranty Documentation** for all Products offered.	
8	The manufacturer's latest s**pecification documents / cut sheets** detailing standard features, operating characteristics, etc., for all products offered.	
9	If the **Non-Resident Reciprocal Bid Act** applies, a copy of your state statute and a determination of the status of Texas bidders/proposers in your home state. If not applicable, indicate "N/A"	
10	If offer includes motor vehicles to be sold in Texas, copies of all current licenses as required by the Texas Motor Vehicle Commission.	

FORM-H: MARKETING PLAN	Procurement No.:	EM06-19
Offeror:	**HUMDINGER EQUIPMENT, LTD.**	

Instructions: Reference Section-B, subsection 9.0

Humdinger Equipment Ltd. sales all the products submitted on contract EM06-19 throughout the U.S. and Cananda. We have four regions that are managed by four different Regional Sales Managers. These managers are responsible for marketing and selling all these products in their assigned region. We also have dealership service and sales partners that assist us in the sales and marketing of all these products in their regions. The managers attend regional, state, and national trade shows where we display our products and how they are listed through the HGAC EM06-19 contract. Humdinger Equipment was listed on the EM06-17 contract in 2017 and 2018 and have sold several products through this contract. Our exposure and success through the HGAC contracts continues to grow and is becoming more common.

Form **W-9**
(Rev. December 2014)
Department of the Treasury
Internal Revenue Service

Request for Taxpayer Identification Number and Certification

Give Form to the requester. Do not send to the IRS.

Print or type
See Specific Instructions on page 2.

1 Name (as shown on your income tax return). Name is required on this line; do not leave this line blank.
Humdinger Equipment, Ltd.

2 Business name/disregarded entity name, if different from above

3 Check appropriate box for federal tax classification; check only **one** of the following seven boxes:
☐ Individual/sole proprietor or single-member LLC ☐ C Corporation ☒ S Corporation ☐ Partnership ☐ Trust/estate
☐ Limited liability company. Enter the tax classification (C=C corporation, S=S corporation, P=partnership) ▶
Note. For a single-member LLC that is disregarded, do not check LLC; check the appropriate box in the line above for the tax classification of the single-member owner.
☐ Other (see instructions) ▶

4 Exemptions (codes apply only to certain entities, not individuals; see instructions on page 3):
Exempt payee code (if any)
Exemption from FATCA reporting code (if any)
(Applies to accounts maintained outside the U.S.)

5 Address (number, street, and apt. or suite no.)
3202 Clovis Road

Requester's name and address (optional)

6 City, state, and ZIP code
Lubbock, Texas 79415

7 List account number(s) here (optional)

Part I Taxpayer Identification Number (TIN)

Enter your TIN in the appropriate box. The TIN provided must match the name given on line 1 to avoid backup withholding. For individuals, this is generally your social security number (SSN). However, for a resident alien, sole proprietor, or disregarded entity, see the Part I instructions on page 3. For other entities, it is your employer identification number (EIN). If you do not have a number, see *How to get a TIN* on page 3.

Note. If the account is in more than one name, see the instructions for line 1 and the chart on page 4 for guidelines on whose number to enter.

Social security number
☐☐☐ - ☐☐ - ☐☐☐☐

or

Employer identification number
2 0 - 2 1 9 2 4 1 0

Part II Certification

Under penalties of perjury, I certify that:

1. The number shown on this form is my correct taxpayer identification number (or I am waiting for a number to be issued to me); and
2. I am not subject to backup withholding because: (a) I am exempt from backup withholding, or (b) I have not been notified by the Internal Revenue Service (IRS) that I am subject to backup withholding as a result of a failure to report all interest or dividends, or (c) the IRS has notified me that I am no longer subject to backup withholding; and
3. I am a U.S. citizen or other U.S. person (defined below); and
4. The FATCA code(s) entered on this form (if any) indicating that I am exempt from FATCA reporting is correct.

Certification instructions. You must cross out item 2 above if you have been notified by the IRS that you are currently subject to backup withholding because you have failed to report all interest and dividends on your tax return. For real estate transactions, item 2 does not apply. For mortgage interest paid, acquisition or abandonment of secured property, cancellation of debt, contributions to an individual retirement arrangement (IRA), and generally, payments other than interest and dividends, you are not required to sign the certification, but you must provide your correct TIN. See the instructions on page 3.

Sign Here **Signature of U.S. person ▶** Chad Phares **Date ▶** 1-25-19

General Instructions

Section references are to the Internal Revenue Code unless otherwise noted.

Future developments. Information about developments affecting Form W-9 (such as legislation enacted after we release it) is at *www.irs.gov/fw9*.

Purpose of Form

An individual or entity (Form W-9 requester) who is required to file an information return with the IRS must obtain your correct taxpayer identification number (TIN) which may be your social security number (SSN), individual taxpayer identification number (ITIN), adoption taxpayer identification number (ATIN), or employer identification number (EIN), to report on an information return the amount paid to you, or other amount reportable on an information return. Examples of information returns include, but are not limited to, the following:

- Form 1099-INT (interest earned or paid)
- Form 1099-DIV (dividends, including those from stocks or mutual funds)
- Form 1099-MISC (various types of income, prizes, awards, or gross proceeds)
- Form 1099-B (stock or mutual fund sales and certain other transactions by brokers)
- Form 1099-S (proceeds from real estate transactions)
- Form 1099-K (merchant card and third party network transactions)
- Form 1098 (home mortgage interest), 1098-E (student loan interest), 1098-T (tuition)
- Form 1099-C (canceled debt)
- Form 1099-A (acquisition or abandonment of secured property)

Use Form W-9 only if you are a U.S. person (including a resident alien), to provide your correct TIN.

If you do not return Form W-9 to the requester with a TIN, you might be subject to backup withholding. See *What is backup withholding?* on page 2.

By signing the filled-out form, you:

1. Certify that the TIN you are giving is correct (or you are waiting for a number to be issued),
2. Certify that you are not subject to backup withholding, or
3. Claim exemption from backup withholding if you are a U.S. exempt payee. If applicable, you are also certifying that as a U.S. person, your allocable share of any partnership income from a U.S. trade or business is not subject to the withholding tax on foreign partners' share of effectively connected income, and
4. Certify that FATCA code(s) entered on this form (if any) indicating that you are exempt from the FATCA reporting, is correct. See *What is FATCA reporting?* on page 2 for further information.

CONFLICT OF INTEREST QUESTIONNAIRE

FORM CIQ

For vendor doing business with local governmental entity

This questionnaire reflects changes made to the law by H.B. 23, 84th Leg., Regular Session.

This questionnaire is being filed in accordance with Chapter 176, Local Government Code, by a vendor who has a business relationship as defined by Section 176.001(1-a) with a local governmental entity and the vendor meets requirements under Section 176.006(a).

By law this questionnaire must be filed with the records administrator of the local governmental entity not later than the 7th business day after the date the vendor becomes aware of facts that require the statement to be filed. *See* Section 176.006(a-1), Local Government Code.

A vendor commits an offense if the vendor knowingly violates Section 176.006, Local Government Code. An offense under this section is a misdemeanor.

OFFICE USE ONLY

Date Received

1 **Name of vendor who has a business relationship with local governmental entity.**

Humdinger Equipment, Ltd.

2 ☐ **Check this box if you are filing an update to a previously filed questionnaire.** (The law requires that you file an updated completed questionnaire with the appropriate filing authority not later than the 7th business day after the date on which you became aware that the originally filed questionnaire was incomplete or inaccurate.)

3 **Name of local government officer about whom the information is being disclosed.**

_____

Name of Officer

4 **Describe each employment or other business relationship with the local government officer, or a family member of the officer, as described by Section 176.003(a)(2)(A). Also describe any family relationship with the local government officer. Complete subparts A and B for each employment or business relationship described. Attach additional pages to this Form CIQ as necessary.**

A. Is the local government officer or a family member of the officer receiving or likely to receive taxable income, other than investment income, from the vendor?

☐ Yes ☐ No

B. Is the vendor receiving or likely to receive taxable income, other than investment income, from or at the direction of the local government officer or a family member of the officer AND the taxable income is not received from the local governmental entity?

☐ Yes ☐ No

5 **Describe each employment or business relationship that the vendor named in Section 1 maintains with a corporation or other business entity with respect to which the local government officer serves as an officer or director, or holds an ownership interest of one percent or more.**

6 ☐ Check this box if the vendor has given the local government officer or a family member of the officer one or more gifts as described in Section 176.003(a)(2)(B), excluding gifts described in Section 176.003(a-1).

7

Chad Phillips

Signature of vendor doing business with the governmental entity

1-25-2019

Date

CONFLICT OF INTEREST QUESTIONNAIRE
For vendor doing business with local governmental entity

A complete copy of Chapter 176 of the Local Government Code may be found at http://www.statutes.legis.state.tx.us/Docs/LG/htm/LG.176.htm. For easy reference, below are some of the sections cited on this form.

Local Government Code § 176.001(1-a): "Business relationship" means a connection between two or more parties based on commercial activity of one of the parties. The term does not include a connection based on:

(A) a transaction that is subject to rate or fee regulation by a federal, state, or local governmental entity or an agency of a federal, state, or local governmental entity;

(B) a transaction conducted at a price and subject to terms available to the public; or

(C) a purchase or lease of goods or services from a person that is chartered by a state or federal agency and that is subject to regular examination by, and reporting to, that agency.

Local Government Code § 176.003(a)(2)(A) and (B):

(a) A local government officer shall file a conflicts disclosure statement with respect to a vendor if:

***

(2) the vendor:

(A) has an employment or other business relationship with the local government officer or a family member of the officer that results in the officer or family member receiving taxable income, other than investment income, that exceeds $2,500 during the 12-month period preceding the date that the officer becomes aware that

(i) a contract between the local governmental entity and vendor has been executed; or

(ii) the local governmental entity is considering entering into a contract with the vendor;

(B) has given to the local government officer or a family member of the officer one or more gifts that have an aggregate value of more than $100 in the 12-month period preceding the date the officer becomes aware that:

(i) a contract between the local governmental entity and vendor has been executed; or

(ii) the local governmental entity is considering entering into a contract with the vendor.

Local Government Code § 176.006(a) and (a-1)

(a) A vendor shall file a completed conflict of interest questionnaire if the vendor has a business relationship with a local governmental entity and:

(1) has an employment or other business relationship with a local government officer of that local governmental entity, or a family member of the officer, described by Section 176.003(a)(2)(A);

(2) has given a local government officer of that local governmental entity, or a family member of the officer, one or more gifts with the aggregate value specified by Section 176.003(a)(2)(B), excluding any gift described by Section 176.003(a-1); or

(3) has a family relationship with a local government officer of that local governmental entity.

(a-1) The completed conflict of interest questionnaire must be filed with the appropriate records administrator not later than the seventh business day after the later of:

(1) the date that the vendor:

(A) begins discussions or negotiations to enter into a contract with the local governmental entity; or

(B) submits to the local governmental entity an application, response to a request for proposals or bids, correspondence, or another writing related to a potential contract with the local governmental entity; or

(2) the date the vendor becomes aware:

(A) of an employment or other business relationship with a local government officer, or a family member of the officer, described by Subsection (a);

(B) that the vendor has given one or more gifts described by Subsection (a); or

(C) of a family relationship with a local government officer.

CERTIFICATE OF INTERESTED PARTIES

FORM 1295

Complete Nos. 1 - 4 and 6 if there are interested parties.
Complete Nos. 1, 2, 3, 5, and 6 if there are no interested parties.

OFFICE USE ONLY
CERTIFICATION OF FILING

Certificate Number:
2019-445033

Date Filed:
01/24/2019

Date Acknowledged:

1 Name of business entity filing form, and the city, state and country of the business entity's place of business.

Humdinger Equipment, Ltd.
Lubbock, TX United States

2 Name of governmental entity or state agency that is a party to the contract for which the form is being filed.

Houston-Galveston Area Council of Governments

3 Provide the identification number used by the governmental entity or state agency to track or identify the contract, and provide a description of the services, goods, or other property to be provided under the contract.

EM06-19
Earth Moving and Construction Equipment

4 Name of Interested Party	City, State, Country (place of business)	Nature of interest (check applicable)	
		Controlling	Intermediary
Holloway, Randy	Lubbock, TX United States	X	
Phares, Brandon	Lubbock, TX United States	X	
Hicks, Donnie	Lubbock, TX United States	X	

5 Check only if there is NO Interested Party. ☐

6 UNSWORN DECLARATION

My name is Chad Phares, and my date of birth is 9/30/1970.

My address is 6902 76th Street (street), Lubbock (city), Tx (state), 79424 (zip code), USA (country).

I declare under penalty of perjury that the foregoing is true and correct.

Executed in Lubbock County, State of Texas, on the 25th day of January (month), 20 19 (year).

Signature of authorized agent of contracting business entity
(Declarant)

House Bill 89 Verification Form

Prohibition on Contracts with Companies Boycotting Israel

The 85th Texas Legislature approved new legislation, effective Sept. 1, 2017, which amends Texas Local Government Code Section 1. Subtitle F, Title 10, Government Code by adding Chapter 2270 which states that a governmental entity may not enter into a contract with a company for goods or services unless the contract contains a written verification from the company that it:

1) does not boycott Israel; and
2) will not boycott Israel during the term of the contract

Pursuant to Section 2270.001, Texas Government Code:

1. "Boycott Israel" means refusing to deal with, terminating business activities with, or otherwise taking any action that is intended to penalize, inflict economic harm on, or limit commercial relations specifically with Israel, or with a person or entity doing business in Israel or in an Israeli-controlled territory, but does not include an action made for ordinary business purposes; and

2. "Company" means a for-profit sole proprietorship, organization, association, corporation, partnership, joint venture, limited partnership, limited liability partnership, or any limited liability company, including a wholly owned subsidiary, majority-owned subsidiary, parent company or affiliate of those entities or business associations that exist to make a profit.

I, (authorized official) Chad Phares, do hereby depose and verify the truthfulness and accuracy of the contents of the statements submitted on this certification under the provisions of Subtitle F, Title 10, Government Code Chapter 2270 and that the company named below:

1) does not boycott Israel currently; and
2) will not boycott Israel during the term of the contract; and
3) is not currently listed on the State of Texas Comptroller's Companies that Boycott Israel List located at https://comptroller.texas.gov/purchasing/publications/divestment.php

Humdinger Equipment, Ltd.

Company Name

Signature of Authorized Official

Vice President

Title of Authorized Official

1-24-19

Date

CONTRACTOR CONTACT INFORMATION

ATTENTION Houston-Galveston Area Council (H-GAC) Contractor:The following information is needed to communicate with your company concerning contract matters which may arise. To expedite the process, we ask that you provide the information requested below. During the term of this contract, notify H-GAC in writing of any changes to this information by emailing updates to: cpcontractfax@h-gac.com

Section I

CONTRACTOR:	**Humdinger Equipment, Ltd.**	**CONTRACT #:**	EM06-19
Purchase Order Address: P.O. Box 64865, Lubbock, Texas 79464		Invoice Address: P.O. Box 64865, Lubbock, Texas 79464	
Contact Name:	Chad Phares	Contact Name:	Treanne Bownds
Address:	3202 Clovis Road	Address:	3202 Clovis Road
Lubbock	Tx 79415	Lubbock	Tx 79415
City	*State* *Zip Code*	*City*	*State* *Zip Code*
Telephone No.:	806-771-9944	Telephone No.#	806-771-9944
Fax No.#	806-771-9945	Fax No.#	806-771-9945
Email Address:	chad@humdingerequipment.com	Email Address:	treanne@humdingerequipment.com

Section II

CONTRACT INFORMATION:

Indicate the person (s) authorized to sign contracts, requests for contract price increases, or other contract-related documents. A copy of your corporate resolution may be acceptable for Section II.

Printed Name of Signatory: Chad Phares		Printed Name of Signatory:	
Corporate Title:	Vice President	Corporate Title:	
Tel. No.:	806-771-9944	Tel. No.:	
Fax No.:	806-771-9945	Fax No.:	
Email Address:	chad@humdingerequipment.com	Email Address:	

Section III

SALES CONTACT INFORMATION

Person who End Users will contact for product information and pricing quotes

Contact Name:	Chad Phares	Title:	Vice President
Address:	3202 Clovis Road	Lubbock	Tx 79415
	Street	City	State Zip
Telephone No.:	806-771-9944	Fax No.:	806-771-9945
Mobile No.: (optional)	806-790-0544		
Email Address:	chad@humdingerequipment.com		

REFERENCES

Canada	City of Kelowna Regional Landfill	Alf Soros	2105 Glenmore Road N, Kelowna, BC V1VC5,Canada	250-469-8915 Tel 250-862-3316 Fax	E520 Compactor – February 2013
Canada	Beaver Regional Landfill	Mark Lowe or Cam Borton	50117-Range Road 173, (Secondary Hwy 854 N.), Beaver County, AB T0B 4A0, Canada	780-663-2038 Tel 780-663-2006 Fax	Unit #1 - E520 Compactor – December 2014 Unit #2 – E520 Compactor May 2017 Unit #3 – E520 Compactor January 2019
Canada	Town of Redcliff, Alberta	Corey Popick	13312 Range Road 71, Redcliff, AB T0J 2P0, Canada	403-548-3618 Tel	E380 Compactor – November 2017
Canada	Camrose, Alberta	Darren King	West Dried Meat Lake Regional Landfill, 3755 - 43 Avenue, Camrose, AB, Canada, T4V 3S8	780-672-4446	E520 Compactor – March 2018
U.S.A.	Kent County Landfill	Dan Rose	10300 100th Street SW, Byron Center, MI 49315-9206	616-350-5048 Tel 616-632-7693 Fax	Unit 1 - E520 Compactor – September 2013 Unit 2 – E520 Compactor March 2019
U.S.A.	City of San Angelo, Texas Landfill c/o Republic Services	Mark Meadows	3002 Old Balinger Road, San Angelo, TX 76905	325-262-6016 Tel 325-481-7779 Fax	E520 Compactor – February 2014
U.S.A.	Austin Texas Landfill, c/o Texas Disposal Systems	Jimmy Gregory	3606 FM 1327, Buda, TX 78610	512-421-1300 Tel 512-421-1393 Fax	E520 Compactor – May 2016
U.S.A.	SGS Recovery Systems, Niagra, NY	Aaron Santarosa	4870 Packard Road, Niagra Falls, NY 14304	716-583-2735 Tel 716-278-2020 Fax	440DT Shredder- July 2015
U.S.A.	Sonoco Papermill, Hartsville, S.C.	Troy Nevells	1 NORTH Second Street, Hartsville, SC 29550	843-639-6420 Tel 662-889-2849 Fax	440D Shredder – September 2013 and 440DT Shredder November 2016 E520 Compactor – May 2018
U.S.A.	Abbeville County Landfill	Daniel Shaw	1094 Gassoway Farm Road, Abbeville, SC 29620	864-446-8473 Tel 864-446-8483 Fax	E320 Compactor – September 2016
U.S.A.	Beck Landfill, San Antonio, Texas	Grant Norman	550 FM 78, Schertz, TX 78154	210-410-8672 Tel 210-6588494 Fax	E520 Eco Compactor – October 2016
U.S.A.	R-GEN Recycling	Chris Webb	12311 Weld County Road 41, Hudson, CO 80642	303-898-2811 Tel 920-632-4645 Fax	440DT Shredder October 2016 and 440DT Shredder January 2017
U.S.A.	City of Grand Island, NE Landfill	Jeff Wattier	19550 West Husker Highway, Sheldon, NE 68876	308-385-5433 Tel 308-385-5498 Fax	E380 Eco Compactor – December 2016
U.S.A.	City of Riverview MI Landfill	Ed Worrell	20863 Grange Road, Riverview, MI 48193	734-216-2929 Tel	E520 Eco Compactor – June 2016
U.S.A.	Geiter Done Demolition	Mike Honer, Jr.	300 Greene St., Buffalo, NY 14206-1025	716-895-8121 Tel 716-894-2595 Mb	440DT Shredder – December 2016 440EM Shredder August 2018
U.S.A.	City of Georgetown, S.C. Landfill	Rich Price	Georgetown, S.C.	843-546-4355 Tel	E380 Eco Compactor – March 2017 E380 Compactor – November 2017
U.S.A.	Bartow County, Georgia	Rip Connor	40 Allatoona Dam Road, Cartersville, Georgia	770-387-5145 Tel	E520 ECO Compactor – December 2017
U.S.A.	Fulton County, New York	Jeff Bouchard	847 Mud Road, Johnstown, NY 12095	518-736-5501 Tel	E520 ECO Compactor – May 2017
U.S.A.	Colorado Energy Recyclers	Trent Peterson	19755 Boca Raton Heights, Fountain, CO 80817	970-385-4528 Tel	440DT ECO Shredder – June 2017
U.S.A.	OCRRA	Kevin Spillane	5158 Ley Creek Drive, Liverpool, NY 13088	315-453-2866 Tel	440DT ECO Shredder – April 2017
U.S.A.	Pinnellas County, Florida	Drew Working	109th Avenue, Saint Petersburg, FL 33716	727-734-5328 Tel	440DT ECO Shredder – March 2017
U.S.A.	Republic Services – Houston Texas	Charlie Walker	8101 East Little York, Houston, TX 77016	832-309-8414 Tel	E520 ECO Compactor – November 2017
U.S.A.	South Dallas County, Iowa	Mike Fountas	2000 Main Street, Adel, IA 50003	515-318-2585 Tel	E260 Compactor – October 2017

EARTH MOVING • WASTE MGT • RECYCLING

U.S.A.	Standing Rock Sanitation	Rhett Albers	603 1st Ave. West, Mobridge, SD 57601	605-848-0929 Tel	440DT Shredder – August 2017
U.S.A.	Jefferson County Tennessee	David Gaut	Jefferson County Sanitation Dept., 650 Grove Road Dandridge, TN 37725	865-397-3544	E380 ECO Compactor – January 2018
U.S.A.	Coastal Regional Waste Authority, N.C.	Bobby Darden	Coastal Environmental Partnership, 7400 Old Hwy 70 West New Bern, NC 28562	252-633-1564	E520 ECO Compactors – March 2018 and August 2018
U.S.A.	Waste Industries Taylor County Georgia	David Pepper	Taylor County Landfill, 33 Stewart Road Mauk, GA 31058	478-862-2610	E520 Compactor – March 2018
U.S.A.	L.P. Gill Jackson, Nebraska	Anthony Gill	L.P. Gill, Inc., 1402 Highway 20 Jackson, NE 68743	402-632-4238	E520 Compactor – March 2018 & 440DT Shredder – October 2017
U.S.A.	Newton County Georgia	Kevin Walter	1113 Usher Street Covington, GA 30014	(770) 786-5808	E380 ECO Compactor – April 2018
U.S.A.	Mecklenburg County Charolette, N.C.	Jeff Smithberger	700 N. Tryon Charlotte, NC 28202-2236	704-336-3711	440DT Shredder – March 2018
U.S.A.	City of Lebanon, New Hampshire	Marc Morgan	370 Plainfield Rd. West Lebanon, NH 03784	603-298-6486	E520 ECO Compactor – June 2018
U.S.A.	Sidney, Nebraska	Dean Sterling	2232 Road 115e Sidney, NE 69162	308-254-6071	E380 Compactor – October 2018
U.S.A.	Daviess County, Kentucky	Robbie Hocker	7772 KY 815 Owensboro, KY 42301	270-316-2589	E520 Compactor – October 2018
U.S.A.	Greater Lebanon, PA	Chuck McCarty	1610 Russell Road Lebanon, PA 17046	717-867-5790	E520 Compactor – January 2019
U.S.A.	Morgan County, AL	Shawn Walker	500 Landfill Drive Trinity, AL 35673	256-341-4996	E520 Compactor – January 2019

EARTH MOVING • WASTE MGT. RECYCLING

HUMDINGER EQUIPMENT™
DESIGNED TO IMPROVE YOUR BOTTOM LINE

3202 CLOVIS ROAD • LUBBOCK, TX 79415
OFFICE: 806-771-9944 • TOLL FREE: 888-999-4909

SERVICE ORGANIZATION

Humdinger Equipment, Ltd. (HEQ) provides world-class service support through its in-house service, technical, and engineering support team combined with our local support teams throughout North America.

HEQ has the capability to provide all service and support from our corporate headquarters located in Lubbock, Texas with our in-house technicians and engineers. HEQ realizes machine up-time is one of the most important aspects of our customer's business; therefore, HEQ contracts a local service provider to be our first response team in our service organization. HEQ sales products throughout North America and prior to delivering and commission our products we contract and certify local service providers.

HEQ inventories all components required for service as the master distribution point for all dealers. HEQ's warehouse and service center for North America is located in Lubbock, Texas. Therefore, all replacement parts are warehoused in Lubbock, Texas for all Humdinger and Tana equipment located in North America. HEQ also utilizes the Cummins distribution system to support the engine components of the Tana compactors and shredders.

HEQ's certified technicians will perform all service and repairs required to Humdinger and Tana equipment. HEQ's regular business hours is from 8 a.m. to 5 p.m., Monday through Friday. HEQ also offers 24 hour customer service access outside of normal business hours. Our customer service policy is to respond to all service or repair orders within 24 hours of initial contact. In most situations we will respond within a few hours.

Service Procedure:

1. Problem is identified by end user or HEQ by observation or through the ProTrack monitoring system
2. End User will notify HEQ or HEQ will notify End User of issue identified
3. HEQ will assess the issue and determine the appropriate actions required to resolve the issue
4. HEQ will implement these actions which may include, but is not limited, to sending the first response service team, instructing the End User to take actions, or sending a technician from HEQ
5. If the product is under warranty, the warranty process shall be followed as defined under our warranty policies. If the product is not under warranty, HEQ will requests End User to provide agreed upon method for authorization to take the necessary actions (i.e. issue a purchase order or pay for the services).

Qualified Factory Trained Service Personnel Normally Available:
HEQ normally has a minimum of three full time fully trained technically support staff available at all times. These are factory support staff and does not include the local First Response team members.

Training Services, Facilities, and Personnel Available:
HEQ provides training with each purchase of our equipment. Training varies depending on the equipment but ranges from one to three days of training for operators, management, and service technician training. Additional training can be scheduled through our corporate office.

Technical Support: Telephone: 806-771-9944 Fax 806-771-9945 Location: Lubbock, Texas
James Lott
Mike Russo
Randy Holloway
Donnie Hicks
Other technical support established at each location near the End User.

EARTH MOVING • WASTE MGT • RECYCLING

H-GAC FORM-D		Catalog Pricing	EM06-19
Bidder:	Humdinger Equipment, Ltd.		
Invitation #:	**EM06-19**		

This form is intended for pricing only those catalogs described in the EM06-19 specification. Bidder shall complete this form packet, print and include copies of it (in its entirety) in the response. **Bidder shall include printed and an electronic media copy of any catalog(s) bid and list price books/sheets in the response package, Bidder shall include a single percentage off-list discount in the data field provided below.**

Manufacturer	H-GAC Product Code	Catalog/Retail Price Sheet Description	Percentage Discount Off Retail/List Price
Al-jon	EM19A01	Landfill Compactor Pricing Catalog Pricing Catalog	
Allied	EM19A02	Breakers Pricing Catalog	
Allied Construction Products	EM19A03	Rammer Hydraulic impact hammers Pricing Catalog	
Allu	EM19A04	Screening Buckets Pricing Catalog	
Arrow Master	EM19A05	Arrow Master Mobile Hydraulic Hammer Price List	
Astec	EM19A06	Astec Underground Price Catalogs: Trenchers, Directional Drills, Attachments and Accessories - Listing Attached	
Badger	EM19A07	Badger Wheeled Excavator Pricing Catalog	
Bell	EM19A08	Bell Articulated Dump Truck Pricing Catalog	
Bell	EM19A09	Off Road Articulating Haul Trucks Pricing Catalog	
Bobcat	EM19A10	Bobcat pricing catalog: Compact Excavators Pricing Catalog	
Bobcat	EM19A11	Bobcat pricing catalog: Compact Track Loaders Pricing Catalog	
Bobcat	EM19A12	Bobcat pricing catalog: Skid Steers and All Wheel Steer Loaders	
Bobcat	EM19A13	Bobcat pricing catalog: Mini Track Loaders	
Bobcat	EM19A14	Bobcat pricing catalog: Telehandlers	
Bobcat	EM19A15	Bobcat pricing catalog: Toolcat™	
Bobcat	EM19A16	Bobcat pricing catalog: Utility Vehicles	
BOMAG	EM19A17	Landfill Compactor Pricing Catalog	
Case	EM19A18	Case Pricing Catalog: Excavators - PL-200 CX - Latest Issue	
Case	EM19A19	Case Pricing Catalog: Compact Excavators - PL-200 MX - Latest Issue	
Case	EM19A20	Case Pricing Catalog: Crawlers - PL-200 CE - Latest Issue	
Case	EM19A21	Case Pricing Catalog: Crawlers - PL-200 UT - Latest Issue	
Case	EM19A22	Case Pricing Catalog: Motor Graders - PL-200 GR - Latest Issue	
Case	EM19A23	Case Pricing Catalog: Wheel Loaders - PL-200 CE - Latest Issue	
Case	EM19A24	Case Pricing Catalog: Compact Wheel Loaders - PL-200 CW - Latest Issue	
Case	EM19A25	Case Pricing Catalog: Compact Track Loaders - PL-200 SL - Latest Issue	
Case	EM19A26	Case Pricing Catalog: Skid Steers - PL-200 SL - Latest Issue	
Case	EM19A27	Case Pricing Catalog: Tractor Loader Backhoe - PL-200 TLB - Latest Issue	
Case	EM19A28	Case Pricing Catalog: Rough Terrain Forklifts - PL-200 RTFL - Latest Issue	
Case	EM19A29	Case Pricing Catalog: Tractor Loaders - PL-200 TLL - Latest Issue	
Caterpillar	EM19A30	Caterpillar Wheel Excavator Pricing Catalog	
Caterpillar	EM19A31	Caterpillar Mini Hydraulic Excavator Pricing Catalog	
Caterpillar	EM19A32	Caterpillar Medium Hydraulic Excavator Pricing Catalog	
Caterpillar	EM19A33	Caterpillar Large Hydraulic Excavator Pricing Catalog	
Caterpillar	EM19A34	Caterpillar Dozer Pricing Catalog	
Caterpillar	EM19A35	Caterpillar Motor Grader Pricing Catalog	

Caterpillar	EM19A36	Caterpillar Compact Wheel Loader Pricing Catalog	
Caterpillar	EM19A37	Caterpillar Small Wheel Loader Pricing Catalog	
Caterpillar	EM19A38	Caterpillar Midsize Wheel Loader Pricing Catalog	
Caterpillar	EM19A39	Caterpillar Large Wheel Loader Pricing Catalog	
Caterpillar	EM19A40	Caterpillar Skid Steer Pricing Catalog	
Caterpillar	EM19A41	Caterpillar Multi Terrain Loader Pricing Catalog	
Caterpillar	EM19A42	Caterpillar Backhoe Loader Pricing Catalog	
Caterpillar	EM19A43	Caterpillar Elevating Scraper Pricing Catalog	
Caterpillar	EM19A44	Caterpillar Open Bowl Scraper Pricing Catalog	
Caterpillar	EM19A45	Caterpillar Articulated Truck Pricing Catalog	
Caterpillar	EM19A46	Caterpillar Waste Handler Pricing Catalog	
Caterpillar	EM19A47	Caterpillar Track Material Handler Pricing Catalog	
Caterpillar	EM19A48	Caterpillar Wheel Material Handler Pricing Catalog	
Champion	EM19A49	Champion Motor Graders Pricing Catalog	
CONNECT Work Tools	EM19A50	CONNECT Hydraulic impact hammers Pricing Catalog	
Diamond Z	EM19A51	Horizontal/Tub Grinders Pricing Catalog	
Ditch Witch	EM19A52	Ditch Witch Pedestrian Trenchers Pricing Catalog	
Ditch Witch	EM19A53	Ditch Witch Tool Carriers Pricing Catalog	
Ditch Witch	EM19A54	Ditch Witch Directional Drills Pricing Catalog	
Ditch Witch	EM19A55	Ditch Witch Vacuum Excavators Pricing Catalog	
Ditch Witch	EM19A56	Ditch Witch Electronics Pricing Catalog	
Ditch Witch	EM19A57	Ditch Witch Ride On Trenchers Pricing Catalog	
Ditch Witch	EM19A58	Ditch Witch Vibratory Plows Pricing Catalog	
Ditch Witch	EM19A59	Ditch Witch Trailers Under 2000lb capacity Pricing Catalog	
Ditch Witch	EM19A60	Ditch Witch Fluid Mixers Pricing Catalog	
Doosan	EM19A61	Doosan pricing catalog: Excavators	
Doosan	EM19A62	Doosan pricing catalog: Wheel Loaders	
Doosan	EM19A63	Doosan pricing catalog: Articulated Dump Trucks	
Dressta	EM19A64	Dressta Crawler Tractor Pricing Catalog	
Dynapac	EM19A65	Compantion Equipment (Smooth, Double, Padfoot Rollers) Pricing Catalog	
Easton	EM19A66	EastonHydraulic Hammer Operating Pricing Catalog	
Edge	EM19A67	Edge Attachments for GEHL Pricing Catalog	
Economy Drilling Solutions	EM19A68	Lo-K-Tor : Vacuum Excavating Equipment Pricing Catalog	
Gehl	EM19A69	Gehl Forklift Pricing Catalog	
Gehl	EM19A70	Gehl Mini-Excavator Pricing Catalog	
Gehl	EM19A71	Gehl Track Skidsteer Pricing Catalog	
Gehl	EM19A72	Gehl Skid Steer Loaders Pricing Catalog	
Gehl	EM19A73	Gehl Wheel Loader Pricing Catalog	
Genesis	EM19A74	Specialty Attachments (Shears, Multiprocessors, Grapples, etc.) Pricing Catalog	
Gradall	EM19A75	Gradall Crawler Excavator Pricing Catalog	
Gradall	EM19A76	Gradall Wheeled Excavator Pricing Catalog	
Gradall	EM19A77	Gradall Truck Mounted Excavator Pricing Catalog	
Grove	EM19A78	Grove All Terrain Cranes Pricng Catalog	
Grove	EM19A79	Grove Truck Mounted Cranes Pricng Catalog	
Grove	EM19A80	Grove Rough Terrain Crane Pricing Catalog	
GROVE	EM19A81	GROVE Industrial Cranes	
Hammerhead	EM19A82	Hammerhead Moles & Piercing Tools Pricing Catalog	
Hammerhead	EM19A83	Hammerhead Pipe Ramming Pricing Catalog	
Hammerhead	EM19A84	Hammerhead Winches Pricing Catalog	
Hammerhead	EM19A85	Hammerhead Pneumatic Pipe Bursting Pricing Catalog	
Hammerhead	EM19A86	Hammerhead Static Pipe Bursting Pricing Catalog	
Hammerhead	EM19A87	Hammerhead Lateral Pipe Bursting Pricing Catalog	
Harlo	EM19A88	Harlo Rough Terrain Forklifts Pricing Catalog	
Hitachi	EM19A89	Hitachi Pricing Catalog - Compact Crawler Excavators	

Hitachi	EM19A90	Hitachi Pricing Catalog - Large Crawler Excavators	
Hitachi	EM19A91	Hitachi Pricing Catalog - Wheeled Excavators	
Hitachi	EM19A92	Wheeler Loaders - Pricing Catalog	
Humdinger Equipment, LTD	EM19A93	Pull Scraper Pricing Catalog	25% - 26.5%
Hydrema	EM19A94	Hydrema Off Road Articulated Dump Truck Price List	
Hyundai	EM19A95	Hyundai Crawler Excavator Pricing Catalog	
Hyundai	EM19A96	Hyundai Wheeled Excavator Pricing Catalog	
Hyundai	EM19A97	Hyundai Wheeled Loader Pricing Catalog	
Hyundai	EM19A98	Hyundai Mini Excavator Pricing Catalog	
Hyundai	EM19A99	Hyundai Single Drum Compaction Roller Pricing Catalog	
Hyundai	EM19A100	Hyundai Tandem Drum Compaction Roller Pricing Catalog	
Hyundai	EM19A101	Hyundai Hydraulic Hammers/Breakers Pricing Catalog	
Irock	EM19A102	Irock Screening Equipment	
JCB	EM19A103	JCB North American Machine Price Catalog: Excavators	
JCB	EM19A104	JCB North American Machine Price Catalog: Mini Excavators	
JCB	EM19A105	JCB North American Machine Price Catalog: Wheel Loaders	
JCB	EM19A106	JCB North American Machine Price Catalog: Backhoes	
JCB	EM19A107	JCB North American Machine Price Catalog: Articulated Trucks	
JCB	EM19A108	JCB North American Machine Price Catalog: Loadall Material	
JCB	EM19A109	JCB North American Machine Price Catalog: Rough Terrain Fork	
John Deere Construction	EM19A110	Deere Compact Excavators Pricing Catalog	
John Deere Construction	EM19A111	Deere Compact Skid Steers Pricing Catalog	
John Deere Construction	EM19A112	Deere Compact Track Loaders Pricing Catalog	
John Deere Construction	EM19A113	Deere Compact Wheel Loaders Pricing Catalog	
John Deere	EM19A114	Deere Compact WorksitePro Attachments Pricing Catalog	
John Deere	EM19A115	Deere Articulated Dump Trucks Pricing Catalog	
John Deere	EM19A116	Deere Backhoe Loaders Pricing Catalog	
John Deere	EM19A117	Deere Crawler Dozers (Small: 450-650) Pricing Catalog	
John Deere	EM19A118	Deere Crawler Dozers (Medium: 700-750) Pricing Catalog	
John Deere	EM19A119	Deere Crawler Dozers (Large: 850-1050) Pricing Catalog	
John Deere	EM19A120	Deere Crawler Loaders Pricing Catalog	
John Deere	EM19A121	Deere Excavators (Small: 75-135) Pricing Catalog	
John Deere	EM19A122	Deere Excavators (Medium: 160-245) Pricing Catalog	
John Deere	EM19A123	Deere Excavators (Large: 250-470) Pricing Catalog	
John Deere	EM19A124	Deere Landscape Loaders Pricing Catalog	
John Deere	EM19A125	Deere Motor Graders Pricing Catalog	
John Deere	EM19A126	Deere Wheeled Excavator Pricing Catalog	
John Deere	EM19A127	Deere Wheel Loader (Small: 444) Pricing Catalog	
John Deere	EM19A128	Deere Wheel Loaders (Medium: 524-624) Pricing Catalog	
John Deere Construction	EM19A129	Deere Wheel Loaders (Large: 644-944) Pricing Catalog	
Kaiser	EM19A130	Kaiser Excavators Pricing Catalog	
Kent	EM19A131	Small & Medium Series Hydraulic Breakers Boom Mounted Pricing Catalog	
Kent	EM19A132	Large Series Hydraulic Breakers Boom Mounted Pricing Catalog	
Kent	EM19A133	Vibratory Plate Boom Mounted Compaction Pricing Catalog	
Kobelco	EM19A134	Kobelco Excavator Pricing Catalog	
Kobelco	EM19A135	Kobelco Crane Pricing Catalog	
Komatsu	EM19A136	Komatsu Excavators Pricing Catalog	
Komatsu	EM19A137	Komatsu Crawler Dozer Pricing Catalog	
Komatsu	EM19A138	Komatsu Motor Grader Pricing Catalog	
Komatsu	EM19A139	Komatsu Wheel Loader Pricing Catalog	
Komatsu	EM19A140	Komatsu Articulated Truck Pricing Catalog	
K-Tech	EM19A141	K-Tech Scraper Pricing Catalog	
Kubota	EM19A142	Kubota Pricing Catalog: Excavators	
Kubota	EM19A143	Kubota Pricing Catalog: Wheel Loaders	
Kubota	EM19A144	Kubota Pricing Catalog: Backhoes	

Kubota	EM19A145	Kubota Pricing Catalog: Compact Track Loaders	
Kubota	EM19A146	Kubota Pricing Catalog: Skid Steer Loaders	
LB Performance/ Blaw Knox	EM19A147	LB Performance/Blaw Knox Pricing Catalog G700 Series Motor Grader	
LBX	EM19A148	LBX Excavator Pricing Catalog	
LeeBoy	EM19A149	LeeBoy Motor Grader Pricing Catalog	
Liebherr	EM19A150	Liebherr Excavators Pricing	
Liebherr	EM19A151	Liebherr Material Handler Pricing	
Liebherr	EM19A152	Liebherr Crawler Loader Pricing	
Liebherr	EM19A153	Liebherr Dozer Pricing	
Loftness Specialized Equipment	EM19A154	Loftness Price Book: VMLogix Products	
Loftness Specialized Equipment	EM19A155	Loftness Price Book: Other Commercial Products	
Luigong	EM19A156	Luigong Wheel Loader Pricing Catalog	
Luigong	EM19A157	Luigong Excavator Pricing Catalog	
Mauldin	EM19A158	Mauldin Motor Grader Pricing Catalog	
Mauldin	EM19A159	Mauldin Maintainer Pricing Catalog	
McLaughlin	EM19A160	McLaughlin Boring Systems Price Catalog: Mighty Mole Machines, Drilling Tools and Accessories	
McLaughlin	EM19A161	McLaughlin Boring Systems Price Catalog: G2 and Verifier Vision Locating Systems	
McLaughlin	EM19A162	McLaughlin Boring Systems Price Catalog: Boring Machines	
McLaughlin	EM19A163	McLaughlin Boring Systems Price Catalog: Vacuums	
Menzi USA	EM19A164	Menzi Muck Excavator Pricing Catalog	
Midland	EM19A165	Road Wideners Pricing Catalog	
Mobile Track Solutions	EM19A166	Mobile Track Solutions - Tractor and Scraper Price List	
Morooka	EM19A167	Morooka Track Carrier Pricing Catalog	
National	EM19A168	National Truck Mounted Crane Pricing Catalog	
New Holland	EM19A169	New Holland Pricing Catalog: Compact Excavators	
New Holland	EM19A170	New Holland Pricing Catalog: Tractor Loader	
New Holland	EM19A171	New Holland Pricing Catalog: Wheel Loaders	
New Holland	EM19A172	New Holland Pricing Catalog: Skid Steers	
New Holland	EM19A173	New Holland Pricing Catalog: Compact Track Loaders	
New Holland	EM19A174	New Holland Pricing Catalog: Tractor Loader Backhoes	
New Holland	EM19A175	New Holland Pricing Catalog Telehandlers	
New Holland	EM19A176	New Holland Pricing Catalog Loadstar Products	
Nor Am	EM19A177	Nor Am Motor Grader Pricing Catalog	
Okada	EM19A178	Okada Top Series Hamer Pricing	
Okada	EM19A179	ORV Series Hammer Pricing	
Okada	EM19A180	Silent Deomlition Attachments (Plate Compactor, Concrete Pulverizer, Screening Buckets, Demoliton Shears)	
Paladin Attachments	EM19A181	Paladin Pricing Catalog: Heavy Attachments - Wheel Loader/Backhoe Loader couplers & attachments	
Paladin Attachments	EM19A182	Paladin Pricing Catalog: Heavy Attachments - Mini, Backhoe, & Excavator couplers & attachments	
Paladin Attachments	EM19A183	Paladin Pricing Catalog: Light Attachments - Compact Tractors, Mini Skid Steers/Compact Tool Carriers, Telehandlers, Wheel Loaders, Backhoe Loaders	
Pettibone	EM19A184	Pettibone Telehandler and Forklift Price List	
PitBull	EM19A185	Lake Erie Portable Screeners Pricing Catalog	
Rosco	EM19A186	Sweepers Pricing Catalog	
Sakai	EM19A187	Compaction Equipment Pricing Catalog	
Sennebogen	EM19A188	Material Handlers Pricing Catalog	
Spaulding	EM19A189	Spaulding Pricing Catalog: Asphalt Haulers	
Takeuchi	EM19A190	Takeuchi Excavator Pricing Catalog	
Takeuchi	EM19A191	Takeuchi Track Loader Pricing Catalog	
Takeuchi	EM19A192	Takeuchi Wheel Loader Pricing Catalog	

Takeuchi	EM19A193	Takeuchi Skid Steer Loader Pricing Catalog	
Tana	EM19A194	Slow Speed Shredder Pricing Catalog	25%-26.25%
Tana	EM19A195	Landfill Compactor Pricing Catalog	23.5%
Terramite	EM19A196	Terramite Compact Tractor Loader Backhoe Price List - Latest Issue	
Terex	EM19A197	Terex Pricing Catalog: Excavators	
Terex	EM19A198	Terex Pricing Catalog: Compact Loaders	
Terex	EM19A199	Terex Pricing Catalog: Compact Track Loaders	
Terex	EM19A200	Terex Pricing Catalog: Backhoe Loaders	
Terex	EM19A201	Terex Pricing Catalog: Wheel Loaders	
Terex	EM19A202	Terex Pricing Catalog: Scrapers	
Terex	EM19A203	Terex Pricing Catalog: Articulated Trucks	
Terex	EM19A204	Terex Pricing Catalog: Telehandlers	
Terex	EM19A205	Terex Pricing Catalog: Skid Steers	
Terex	EM19A206	Terex Pricing Catalog: Site Dumpers	
Terex	EM19A207	Terex Pricing Catalog: Tracked Utility Vehicles	
Terex	EM19A208	Terex Pricing Catalog: Trucks	
Terex	EM19A209	Terex Pricing Catalog: Articulated Dump Trucks	
Terex Fuchs	EM19A210	Terex Fuchs Material Handlers RHL Pricing Catalog	
Terex Fuchs	EM19A211	Terex Fuchs Material Handlers MHL Pricing Catalog	
Terex Trucks Americas	EM19A212	Terex Trucks Americas Pricing Catalog: Articulated Trucks	
Thundercreek	EM19A213	Thundercreek Fuel Trailers Pricing Catalog	
TRIC	EM19A214	TRIC Pipe Bursting Tools Catalog	
TT Technologies	EM19A215	TT Technologies Pipe Ramming Tool Catalog	
TT Technologies	EM19A216	TT Technologies Static Pipe Bursting Tool Catalog	
TT Technologies	EM19A217	TT Technologies Pneumatic Pipe Bursting Tool Catalog	
TT Technologies	EM19A218	TT Technologies Horizontal Boring Tool Catalog	
Vermeer	EM19A219	Vermeer Rubber Tire Division Price Catalog: Rubber Tire Trenchers, Cable Plows, Compact Loaders	
Vermeer	EM19A220	Vermeer Track Trencher Division Price Catalog: Trench Compactors, Concrete Cutters, Track Trenchers	
Vermeer	EM19A221	Vermeer Trenchless/Advanced Control Systems Price Catalog: Bore Planning Equipment, Directional Drilling Locators	
Vermeer	EM19A222	Vermeer Trenchless Division Price Catalog: Directional Drills, Mud Mixing Systems, Core Saws	
Vermeer	EM19A223	Vermeer MFG Pricing Catalog: Vac-tron vacuums	
Volvo	EM19A224	Volvo Pricing Catalog: Hydraulic Crawler Excavators Small (Mini) (below 20,000#)	
Volvo	EM19A225	Volvo Pricing Catalog: Hydraulic Crawler Excavators Large (above 20,000#)	
Volvo	EM19A226	Volvo Pricing Catalog: Wheeled Hydraulic Excavators	
Volvo	EM19A227	Volvo Pricing Catalog: Wheel Loaders Large	
Volvo	EM19A228	Volvo Pricing Catalog: Wheel Loaders (Compact)	
Volvo	EM19A229	Volvo Pricing Catalog: Off The Road Articulated Haul Trucks	
Volvo	EM19A230	Volvo Pricing Catalog: Skid Steer Loaders	
Volvo	EM19A231	SDLG Wheel Loaders Pricing Catalog	
Volvo	EM19A232	Volvo Pricing Catalog: Landfill Compactor	
Woodsman	EM19A233	Chippers Pricing Catalog	
Yanmar	EM19A234	Yanmar Construction Quick Reference Price List Excavators	
Yanmar	EM19A235	Yanmar Construction Quick Reference Price List Compact Tractor/Loader/Backhoe	
Yanmar	EM19A236	Yanmar Construction Quick Reference Price List Wheel Loaders	
Yanmar	EM19A237	Yanmar Construction Quick Reference Price List Crawler Carriers	
FlipScreen	EM19A238	Screening Buckets Pricing Catalog: Skid Steers, Wheel Loaders, Excavators, Telehandlers, Backhoe Loaders, Track Loaders, Compact Loaders	

Kinshofer	EM19A239	Kinshofer Excavator & Crane Attachments Pricing Catalog: Grabs, Grinders, Grapples, Shears, Trenchers, Pulverisers, Earth Drills and Augers	
AugerTorque	EM19A240	AugerTorque Skid Steer & Excavator Attachments Pricing Catalog: Trenchers, Brooms, Pallet Forks, Hedge Trimmers, Cement Mixers, Stump Planers, Earth Drills & Augers	

Humdinger Equipment, Ltd. & Tana North America, Ltd.
HGAC 2019 Price Schedule

Product	2019 List Price	2019 HGAC Pricing - Freight & Options Extra	HGAC Discount	Estimated Delivery Times
EARTH MOVING / SCRAPER				
H620 Scraper	173,326	127,395	26.50%	60 days
H618C Scraper	124,104	91,216	26.50%	60 days
H625 Scraper	207,078	152,203	26.50%	60 days
H626 Pull	218,500	160,598	26.50%	60 days
H634 Scraper	301,026	221,255	26.50%	60 days
H720D Trommel	397,500	293,157	26.25%	60-90 Days
H720DT Trommel	457,125	337,130	26.25%	60-90 Days
H816D Trommel	377,625	278,499	26.25%	60-90 Days
H816DT Trommel	437,250	322,472	26.25%	60-90 Days
455 CDH Chain Disk Harrow	111,618	83,714	25.00%	60 days
SHREDDERS				
Shark ECO 220D Shredder	916,858	676,183	26.25%	120-150 Days
Shark ECO 220DT Shredder	1,018,491	751,137	26.25%	120-150 Days
Shark ECO 440D Shredder	1,050,116	774,461	26.25%	120-150 Days
Shark ECO 440DT Shredder	1,145,532	844,830	26.25%	120-150 Days
Shark 440E Electric Shredder	1,094,878	807,472	26.25%	150 Days
Shark 440EM Electric Mobile	1,109,878	818,535	26.25%	150 Days
KW612D Windrow Turner	437,250	327,938	25.00%	60-90 Days
KW612DT Windrow Turner	496,875	372,657	25.00%	60-90 Days
KW714D Windrow Turner	510,125	382,594	25.00%	60-90 Days
KW714DT Windrow Turner	569,750	427,313	25.00%	60-90 Days
KW716D Windrow Turner	556,500	417,375	25.00%	60-90 Days
KW716DT Windrow Turner	616,125	462,094	25.00%	60-90 Days
KW818D Windrow Turner	735,375	551,532	25.00%	60-90 Days
KW818DT Windrow Turner	795,000	596,250	25.00%	60-90 Days
KW820D Windrow Turner	808,250	606,188	25.00%	60-90 Days
KW820DT Windrow Turner	867,875	650,907	25.00%	60-90 Days
COMPACTORS				
E520 ECO Landfill Compactor	1,208,400	924,426	23.50%	120-150 Days
E450 ECO Landfill Compactor	1,100,280	841,715	23.50%	120-150 Days
E380 ECO Landfill Compactor	922,200	705,483	23.50%	120-150 Days
E320 ECO Landfill Compactor	819,479	626,901	23.50%	120-150 Days
E260 ECO Landfill Compactor	648,599	496,179	23.50%	120-150 Days

FORM-E -- PUBLISHED OPTIONS		Procurement No.: EM06-19
Offeror Name:	**HUMDINGER EQUIPMENT, LTD.**	
Notes: (Important)	1) **Use a single Form E for optiona/accessories/services items that fall outside of the list price sheets/book (NOT THOSE IEMS FOUND IN THE CATALOG)** and quote each on a single, separate line. Insert additional lines as necessary.	
	2) Completely describe each item. Include the manufacturer's code or part number. Each item listed **MUST** have a unique code or part number so that it can be identified in any subsequest contract.	
	3) Options which are upgrades/downgrades of a **Form D** Item should be priced at the differential amount between the cost of the **Form D** Item and the upgrade/downgrade option.	
Code or Part No.	**Option Description**	**Offered Price, in Whole Dollars**
FREIGHT COLLECT	All Products are sold "F.O.B. DESTINATION--FREIGHT COLLECT"- Price to be determined for each sale - Cost is calculated by all transportation cost from the factory to delivery to the customer. This includes, but is not limited to, the following types of freight charges: ocean freight, cranes, rail, truck, and other transporation costs. Offered price is only for reference. Each purchase will receive a specific quote for transporation costs.	2,500.00 to 105,000.00
	EARTH MOVING / SCRAPERS	
H620-BRAKES	BRAKES FOR A H620 SCRAPER	$6,950
H620-GOOSENECK	GOOSENECK OPTION - H620 - UPGRADE	$22,965
H635-GOOSENECK	GOOSENECK OPTION - H635 - UPGRADE	$31,500
	TWIN DRUM LANDFILL COMPACTORS	
924269	FIRE SUPPRESSION SYSTEM - Eco520-Eco380	$20,150
924268	FIRE SUPPRESSION SYSTEM - Eco320-Eco260	$17,750
918366	FIRE EXTINGUISHER - MOUNTED ON CABIN	$375
918364	LED UPGRADED WORKING LIGHTS	$2,460
919673	WORKING LIGHTS ON THE SIDE	$845
918368	TOOLBOX	$835
912050	FUEL TANK FILLING PUMP 24V	$2,635
924258	WABASTO - DIESEL ENGINE & HYDRAULIC OIL HEATER	$8,525
918365	HEATED MIRRORS	$995
918360	CABIN PRE-HEATER, DIESEL	$6,785
918359	CAIN PRE-HEATER, ELECTRIC	$1,250
917369	CABIN ACTIVE CARBON FILTER	$625
917370	CABIN MICRO FILTER	$1,250
917364	FIRST AID KIT	$350
920158	CUSTOM PAINT COLOR	$8,795
920646	GPS SYSTEM - IF PURCHASED AFTER UNIT IS DELIVERED	$84,750
920646	GPS SYSTEM - IF PURCHASED WITH UNIT	$69,750
UPGRADED RAILS A	UPGRADED RAILS - A	$22,575
UPGRADED RAILS B	UPGRADED RAILS - b	$15,939
CUSTOM RAILS	CUSTOM RAIL - DESIGNED TO CUSTOMER'S REQUIREMENTS	$9,500-$25,000
360 CAMERA	360 DEGREE COLOR CAMERA	$2,720
10220UB	SEMI-U BLADE UPGRADE - UPCHARGE FROM STANDARD STRAIGHT BLADE	$4,150
PROTRACK	PROTRACK ACCESS AND REPORTS -- ANNUAL COST	$1,000

	SHREDDERS	
918493	REMOTE CONTROL	$6,750
919892	OVERBAND MAGNET	$24,192
SCREEN	SCREEN - ANY SIZE	$9,600
920387	DUST SUPPRESSION SYSTEM	$26,880
918480	FUEL TANK FILLING PUMP 24V	$2,296
924258	WABASTO - DIESEL ENGINE & HYDRAULIC OIL HEATER	$8,525
920158	CUSTOM PAINT COLOR	$8,795
918929	POWERPACK HOOD - ELECTRIC UNIT ONLY	$27,500

PROPOSED COMPACTOR EQUIPMENT

Tana North America, Ltd. & Humdinger Equipment, Ltd. offer landfill compactor choices from the Tana E Series Landfill Compactor product line. The following pages provide the specifications, capabilities, and costs information for the TANA E520 ECO, E450 ECO, E380 ECO, E320 ECO, or E260ECO model depending on your specifications that can achieve the objectives stated.

Tana developed the first purpose-built landfill compactor over 45 years ago that provide customers the capabilities listed below. Tana's has over 1,500 compactors in landfills in over 100 countries world-wide successfully compacting every type of waste deposited in any landfill in the world under every type of weather and environment condition that exist.

- **Tana performs year-round compaction on residential and commercial wastes.**
- **Tana performs full load functions under extreme ice/snow/wet/dust/mud conditions.**
- **Tana performs full load functions on steep upslope sites and steep down slopes in excess of 30% grade.**
- **Tana's compactors are rated to work in temperature ranges from -22 to 122 degrees Fahrenheit.**

Hydrostatic Drive

TANA'S HYDROSTATIC SYSTEM
vs.
Power Shift Transmissions

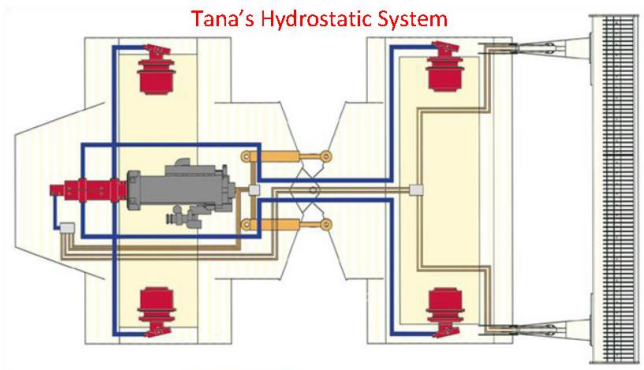

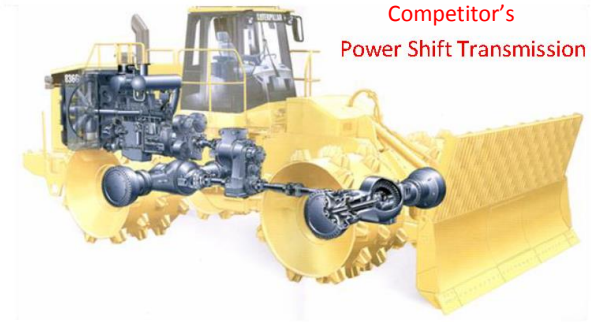

The TANA Design:

- Two Pumps
- 2,3, 0r 4 Final Drives & Motors

TANA's Design Eliminates:

- Torque converter
- Power Shift Transmission
- Transfer gearbox
- Drive shafts & universal joints
- 2 differentials
- Disc Brakes (Service)
- Complicated control systems
- Clutch Pedal & Clutch
- Brake Pedal & Controllers

Easiest Operation Control System

- 100% Control with two joysticks
- No Foot Controls
- Drive direction and speed on one joystick – interchangeable
- Blade and steering on one joystick – interchangeable

RESULTS: TANA's simple hydrostatic system allows for a more efficient operator, less downtime and an overall cost advantage that is not possible with a power shift mechanical drive

Pumps

- One tandem pump arrangement
- Variable displacement axial piston pumps with electrical proportional control

Motors

- E520 & E450 has 4 variable displacement motors
- E380 has 3 variable displacement motors
- E320 & E260 has 2 variable displacement motors

Cooling of hydraulic system

- Air-operated oil cooler
- Removable air filtration screen

Hydraulic oil filtration

- Return line filter and two charge pressure filters

Final drive planetary system

- Transmits hydraulic power to the drums
- Three-stage planetary system
- Integrated multi-disk hydraulic parking brake
- Splash lubrication system

Hydrostatic System

- Separate systems for each drum
- High and low speed settings
- Driving speed & direction controlled with one lever
- Infinitely variable speed control

ENGINE, A/C & HEATER, WEIGHT

- **Air Conditioner and Heater –**
  - Standard OEM equipment includes air conditioner and heater that will work in temperature range of -22 to 122 degree Fahrenheit.
- **Dry and Operating Weight** – Tana offers compactors at six different operating weights ranging between 57,000 and 120,000 pounds.
- **Engine** – Tana compactors utilize the Cummins diesel engines QSX15-C535 (E520 & E450), QSX15-C450 (E380), QSL9-C320 (E320), and a QSL9-C265 (E260) all with emission certifications U.S. EPA Tier 4 Final, CARB Tier 4 Final, and EU Stage IV.
  - All model's engines utilizes the following specifications with the Cummins Engine Performance Data enclosed.
    - Turbo charged, 6 cylinders in line, after-cooled electrically controlled diesel engine that communicates with the TCS system
    - Fulfills EPA & CARB Tier 4 Final and EU Stage IV non-road emission certificates
    - Engine equipment
      - Dry type air cleaner with replaceable primary and safety element
      - Built-in pre-cleaner and service indicator
      - 1 piece fuel filter and water separator & 1 piece oil filter
      - Reversing Fan
      - Exhaust muffler
      - Radiator with separate charge air cooler
    - Starter motor 24 V
    - Alternator 24 V, 70 A (140 amp option available)

EASIEST ACCESS OF ALL COMPACTORS

GROUND CLEARANCE

- **High Ground Clearance** – Tana's compactors have the highest ground clearance in the industry.
  - Tana's ground clearance is 35 inches
  - Drum construction leaves no vulnerable spaces or belly pans between axle ends where waste can build up requiring continuous cleaning while reducing the compaction capability of the machine.
  - Built-in wire cutters in the drums do not allow wire to wrap around the drums requiring cleaning that takes time away from the operating compacting the waste.
  - Standard scraper bar system is simple, robust, efficient, and built on both sides of the drums that eliminates any waste build-up on the drums or underneath the compactor. This allows the operating to spend his or her time compacting waste without the need to continuously clean the wheels. The internal comb design of the drum and scraper bars also contributes to the elimination of the build-up of waste underneath the compactor.

- No wire wrap around drums
- Simple, robust and efficient scraper bar system across the entire drum

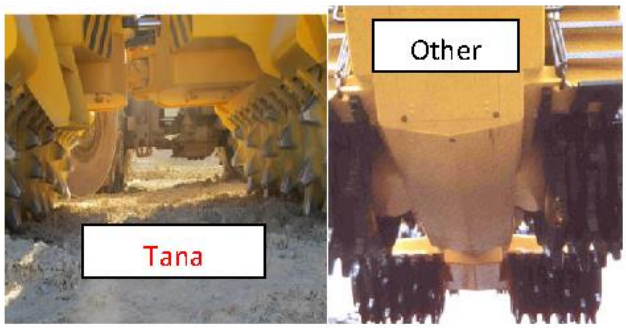

MACHINE SPEED

Transmission Speeds

- Hydrostatic Transmission System allows for an unlimited number of forward and reversing speeds between the driving speed ranges of 0 to 4.7 MPH. This allows the operator optimum control of the compactor in various types of trash, weather conditions, and slope grades.

TANA'S HYDROSTATIC SYSTEM vs. Power Shift Transmissions

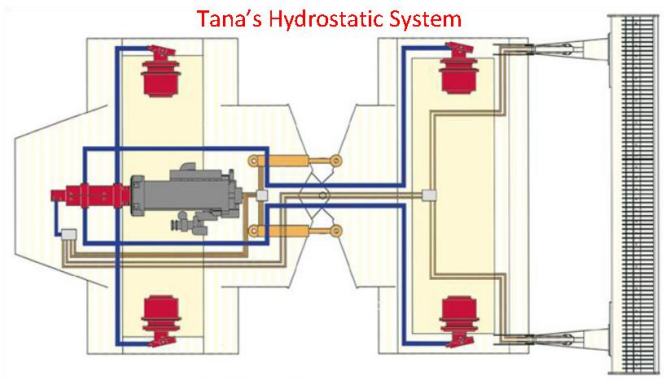

The TANA Design:

- Two Pumps
- 2,3, 0r 4 Final Drives & Motors

TANA's Design Eliminates:

- Torque converter
- Power Shift Transmission
- Transfer gearbox
- Drive shafts & universal joints
- 2 differentials
- Disc Brakes (Service)
- Complicated control systems
- Clutch Pedal & Clutch
- Brake Pedal & Controllers

Easiest Operation Control System

- 100% Control with two joysticks
- No Foot Controls
- Drive direction and speed on one joystick – interchangeable
- Blade and steering on one joystick – interchangeable

RESULTS: TANA's simple hydrostatic system allows for a more efficient operator, less downtime and an overall cost advantage that is not possible with a power shift mechanical drive

VISABILITY & BLADE DESIGN

Blade – Tana's blades are a straight blade design with a see-through trash screen.

- The E520 & E450 blades' design is 197 inches wide, 77 inches tall, 48 inches of movement above ground level, and 6 inches of movement below ground level. E380 blades' design is 177 inches wide, 69 inches tall, 46 inches of movement above ground level, and 6 inches of movement below ground level. The E320 and E260 blades' design is 144 inches wide, 69 inches tall, 46 inches of movement above ground level, and 6 inches of movement below ground level.
- Bolt-on reversible cutting edges
- Arm joints are equipped with hardened pins and spherical bearings

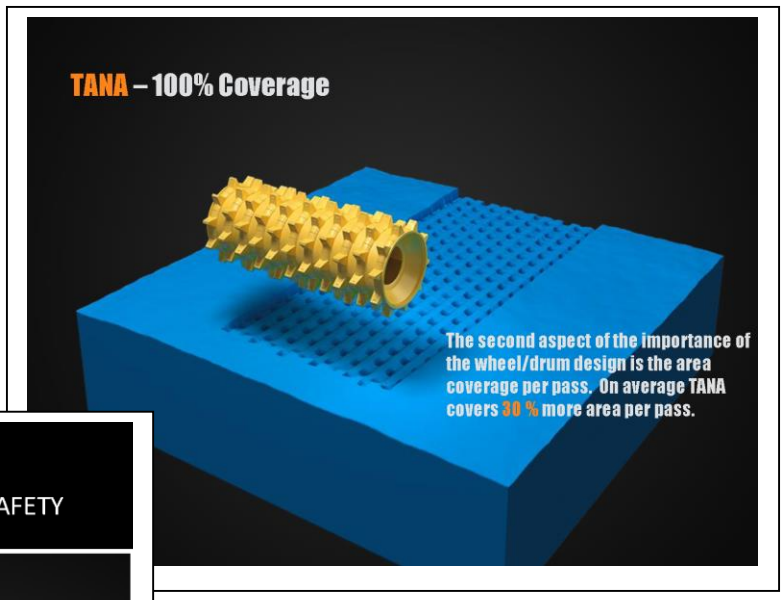

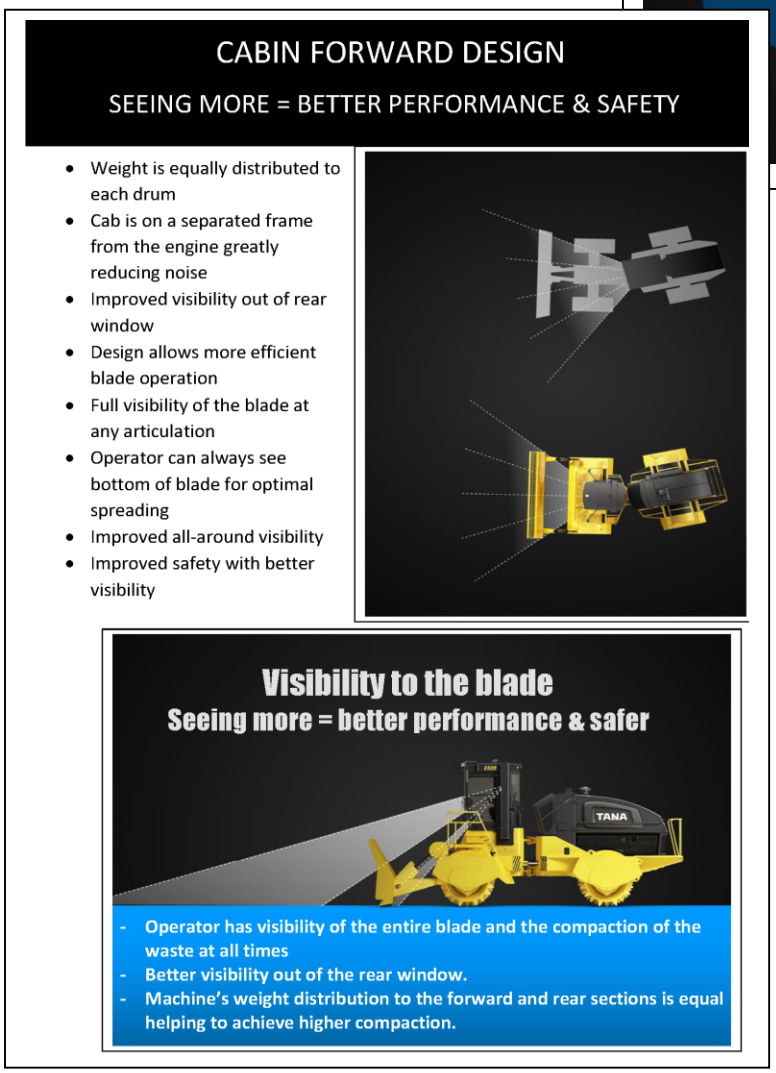

TANA ROLLER COMPACTION METHOD

Wheels -- Tana's compactor technology includes the twin drum compaction system that provides for the greatest compaction results in the industry.

- E520 & E450 includes two 150 inch width compaction drums. Drums have 110 crushing teeth each, or a total of 220 crushing teeth that are 8 inches in height. The standard scraper bar system include 20 scraper bars on each drum. The compactor also has 2 wire cutters on the front drum and 4 wire cutters on the rear drum. The E320 & E260 includes two 105 inch width compaction drums. Drums have 80 crushing teeth each, or a total of 160 crushing teeth that are 8 inches in height. The standard scraper bar system include 14 scraper bars on each drum. The compactor also has 2 wire cutters on the front drum and 4 wire cutters on the rear drum. E520 & E450 includes two 150 inch width compaction drums. Drums have 110 crushing teeth each, or a total of 220 crushing teeth that are 8 inches in height. The standard scraper bar system include 20 scraper bars on each drum. The compactor also has 2 wire cutters on the front drum and 4 wire cutters on the rear drum.

TANA ROLLER COMPACTION (TRC) METHOD

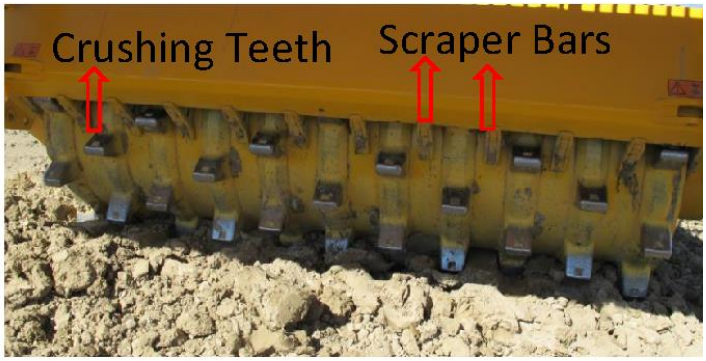

- Two full-width passes creating uniform compaction
- Highest capacity tonnage per hour in the market
- Excellent traction with no loss of compaction force
- Smooth, level surface
- High Spots get maximum force applied while blade does not dig in
- No cabin swing or weight shift
- 80 to 110 "Big Foot" crushing teeth per drum maximizing crushing force
- Even load spreading providing maximum compaction
- Scraper bar system keep drums clean and wire cutters eliminate wrapping

RIGID FRAME MAXIMIZES CRUSHING FORCE

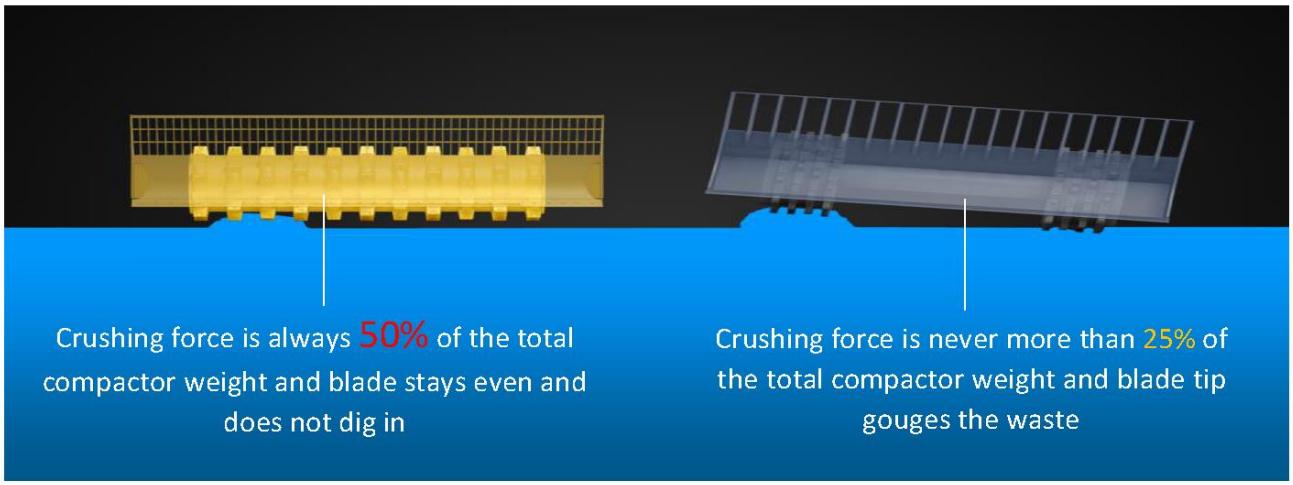

RIGID FRAME ENABLES EVEN SPREADING OF WASTE

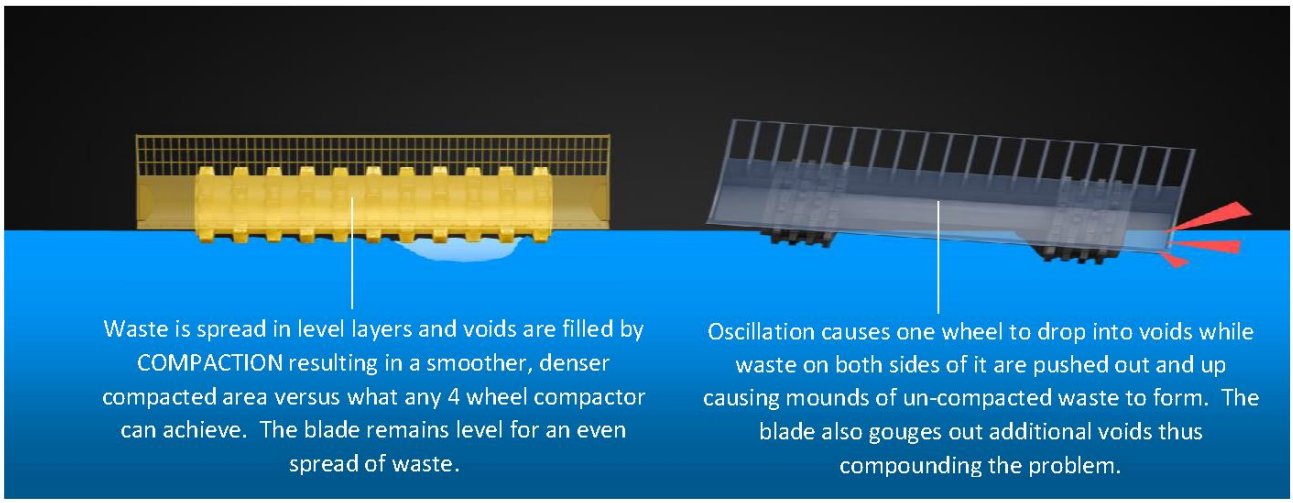

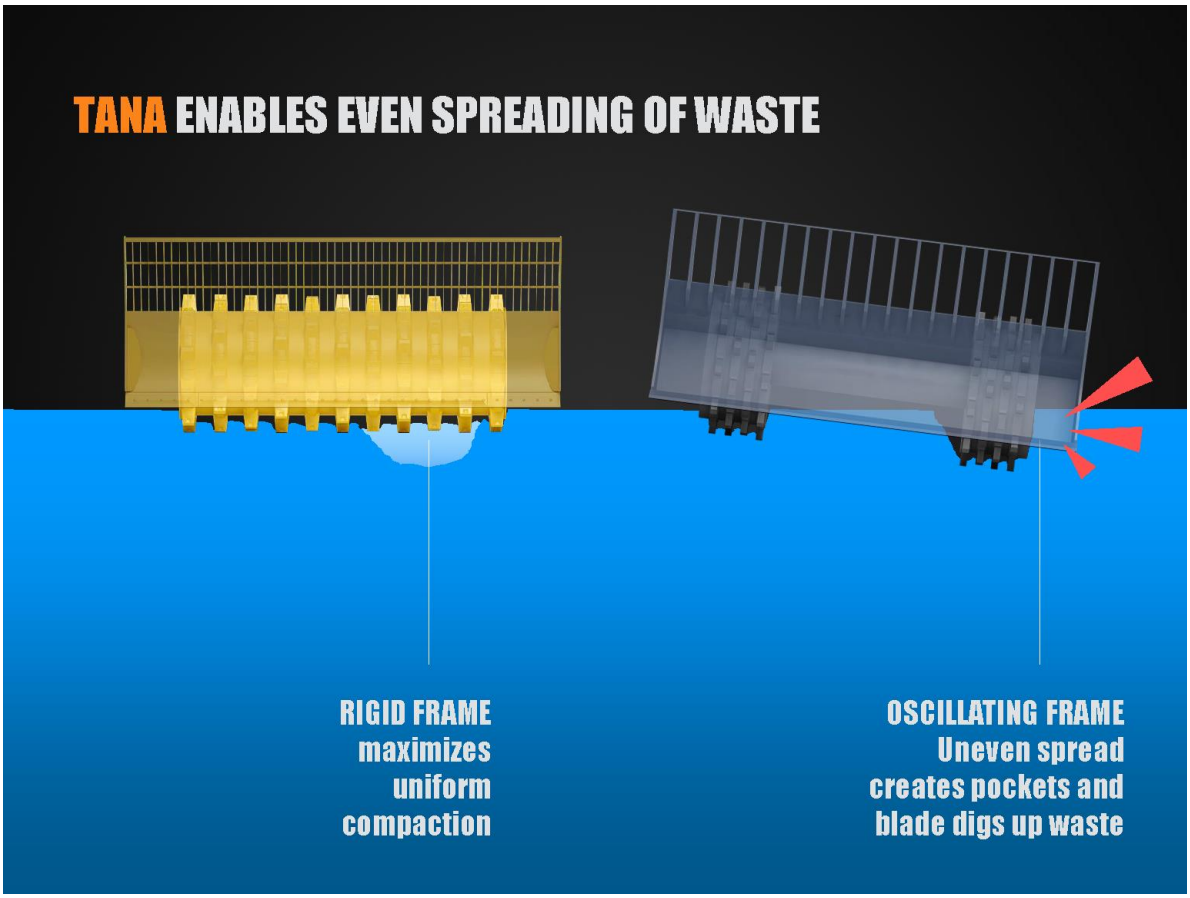
TANA ENABLES EVEN SPREADING OF WASTE
RIGID FRAME
maximizes
uniform
compaction
OSCILLATING FRAME
Uneven spread
creates pockets and
blade digs up waste

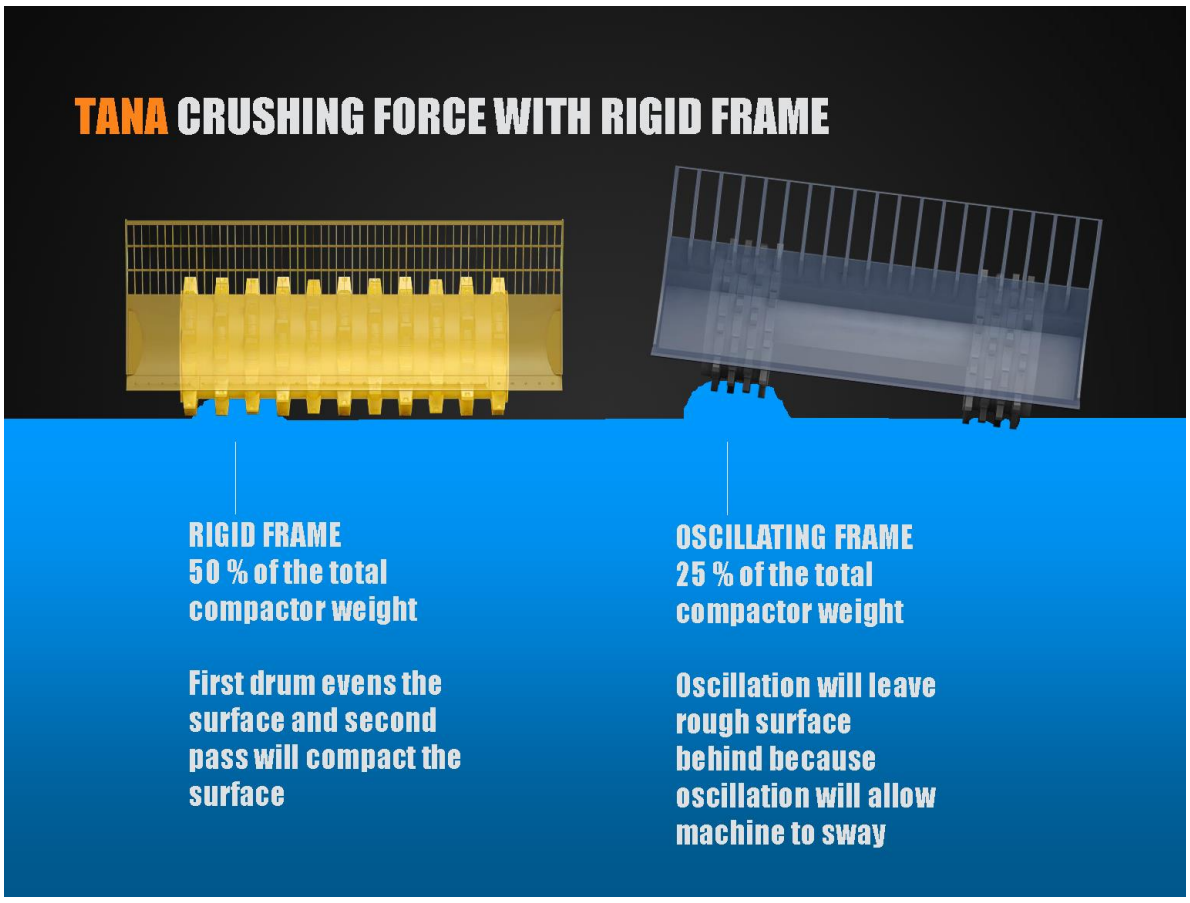
TANA CRUSHING FORCE WITH RIGID FRAME
RIGID FRAME
50 % of the total
compactor weight
First drum evens the
surface and second
pass will compact the
surface
OSCILLATING FRAME
25 % of the total
compactor weight
Oscillation will leave
rough surface
behind because
oscillation will allow
machine to sway

FIRE SUPPRESSION SYSTEMS

- The Fogmaker, Amerex, or AFEX protects your investment against fire in the engine compartment and hydraulic areas. The system is semi-automatic with pneumatic detection. It can cope with high temperature changes and works independently of the power supply.
- The twin drum design of the Tana compactors provides less opportunity for fires to start because of the higher compaction rates, smoother surfaces, and less voids created by the 3 and 4 wheel designed machines.

Safety options **TANA**

SEMI-AUTO FIRE EXTINGUISHING SYSTEM

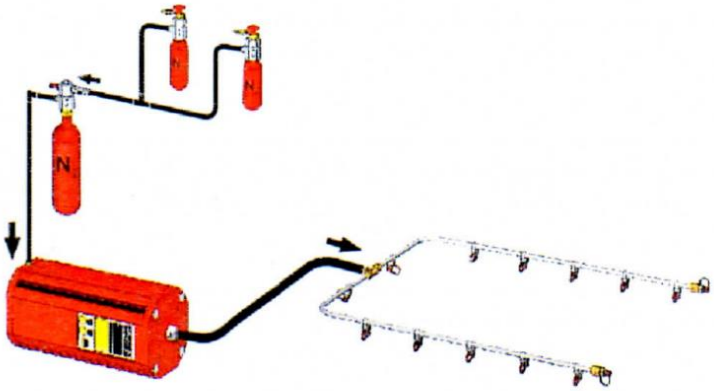

Semi-auto fire extinguishing system ***Item no: 912048***

- *The liquid used in the system is specially produced for use on vehicles. It copes with fires in flammable liquids like petrol, diesel and hydraulic oils and in burning solids. It smothers quickly and efficiently e.g. diesel oil flowing from a burst fuel pipe or hydraulic oil sprayed under pressure.*
- *The liquid will also stay on a bed of saw dust, chips and the like, preventing reignition.*
- *Applicable for all TANA landfill compactor models*

FUEL TANK CAPACITY

- Tana's compactor fuel tank capacity is 201 gallons.
-

VALUE ADDED SAFETY & ERGONOMIC FEATURES

- Cab Forward Design minimizes operator‘s blind spots.
- 100% walk-around access on deck level provides a safer maintenance work environment.
- Integrated ROPS/FOPS construction
- Emergency shut-down function

SUPERIOR CABIN ERGONOMICS

- Operator has clear vision of bottom of blade at any articulation
- Two joysticks controls with adjustable sensitivity settings
- Climate control with active carbon filtering of intake air
- Cabin air intake located on top of the cabin reducing debris intake

- Noise Level 73.5 dB(A) – Lower than all other compactors in the market
- Intermittent wipers and washer
- Rigid frame structure reduces cabin sway
- Vibration damped cabin minimizes fatigue
- Adjustable air suspension

TANA ROLLER COMPACTION (TRC) METHOD

- Two full-width passes creating uniform compaction
- Highest capacity tonnage per hour in the market
- Excellent traction with no loss of compaction force
- Smooth, level surface
- High Spots get maximum force applied while blade does not dig in
- No cabin swing or weight shift
- 80 to 110 "Big Foot" crushing teeth per drum maximizing crushing force
- Even load spreading providing maximum compaction
- Scraper bar system keep drums clean and wire cutters eliminate wrapping

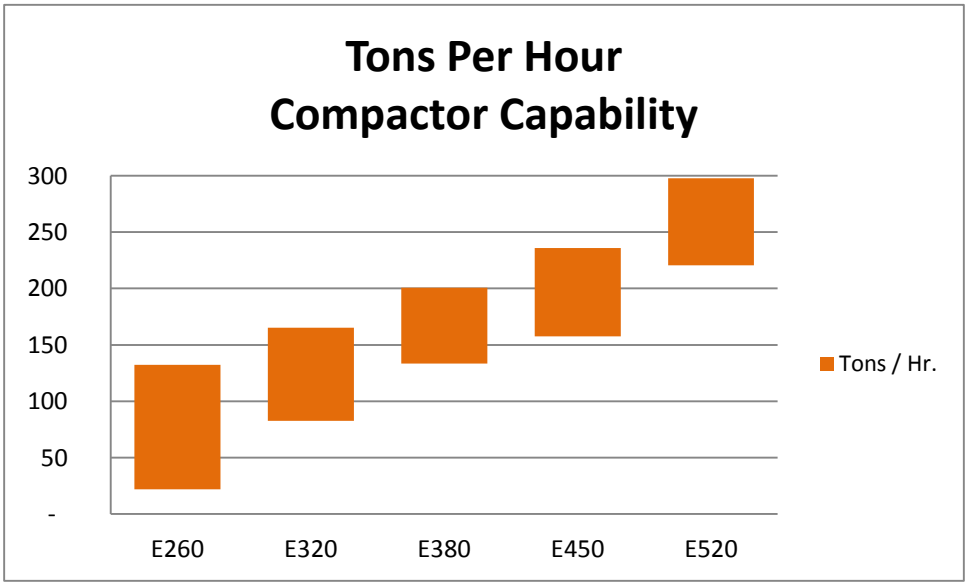

TWIN FULL WIDTH DRUMS

Tana's TRC Method also provides advantages through the full width compaction and even surfaces that are realized during operation. This assist in achieving higher compaction rates as well as reducing the operating cost due to the speed at which desired compaction will be reached. The depiction below provides a visual of how Tana's TRC Method compares to its four (4) wheel competitors. It can clearly be seen how the four (4) wheel compactor creates blowout of waste to the outside and inside of the compactor. This blowout must then be passed over again while the four (4) wheel compactor continues to create more blowout to the outside and inside. It is very difficult for the compactor driver to be able to easily line-up the compactor with the blowout waste; therefore, requiring much more time to cover the waste needing compaction. Through independent study it has been consistently proving that the Tana compactor will reach or exceed desired compaction levels in 30-40% less time than its four (4) wheel competitors.

TWIN DRUMS PROVIDE FULL WIDTH COMPACTION AND EVEN SURFACE

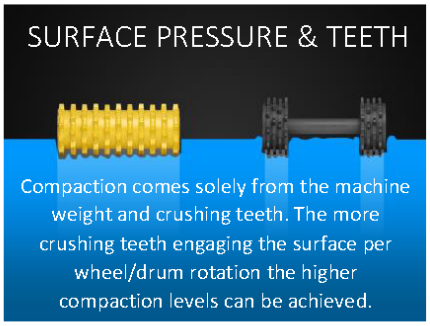

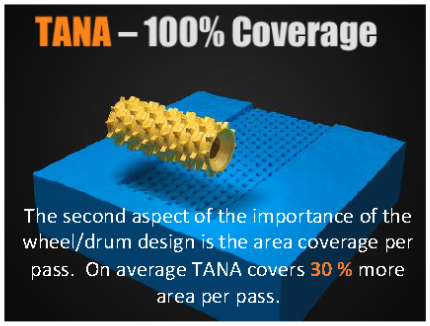

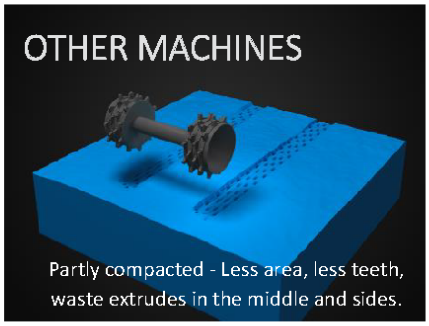

- Reduces waste blow-out created by four wheel compactors
- Compaction achieved quicker because operator does not have to go over and over and over the mounts creating more problems in the process
- Maximum compaction is achieved in less time
- 15-25% more waste compacted per square yard with twin drum technology
- 30-40% less time results in savings for fuel, labor, and service
- 40-60% less cover material because of the flatness and tightness of the face

RIGID FRAME

Another performance advantage Tana's TRC Method has over its competition is its rigid frame design versus the oscillating frame design of other compactors. The crushing force with a rigid frame design is double the crushing force of an oscillating frame on high mounds of waste. The rigid frame also is always spreading in level layers and voids are filled by compaction resulting in a smoother, denser compacted area versus what any four (4) wheel oscillating frame compactor can achieve. The blade on the rigid frame is either in a high mound or void situation always staying level with the twin drum; therefore, does not dig out compacted waste on the low side of the blade like occurs with the oscillating frame compactors.

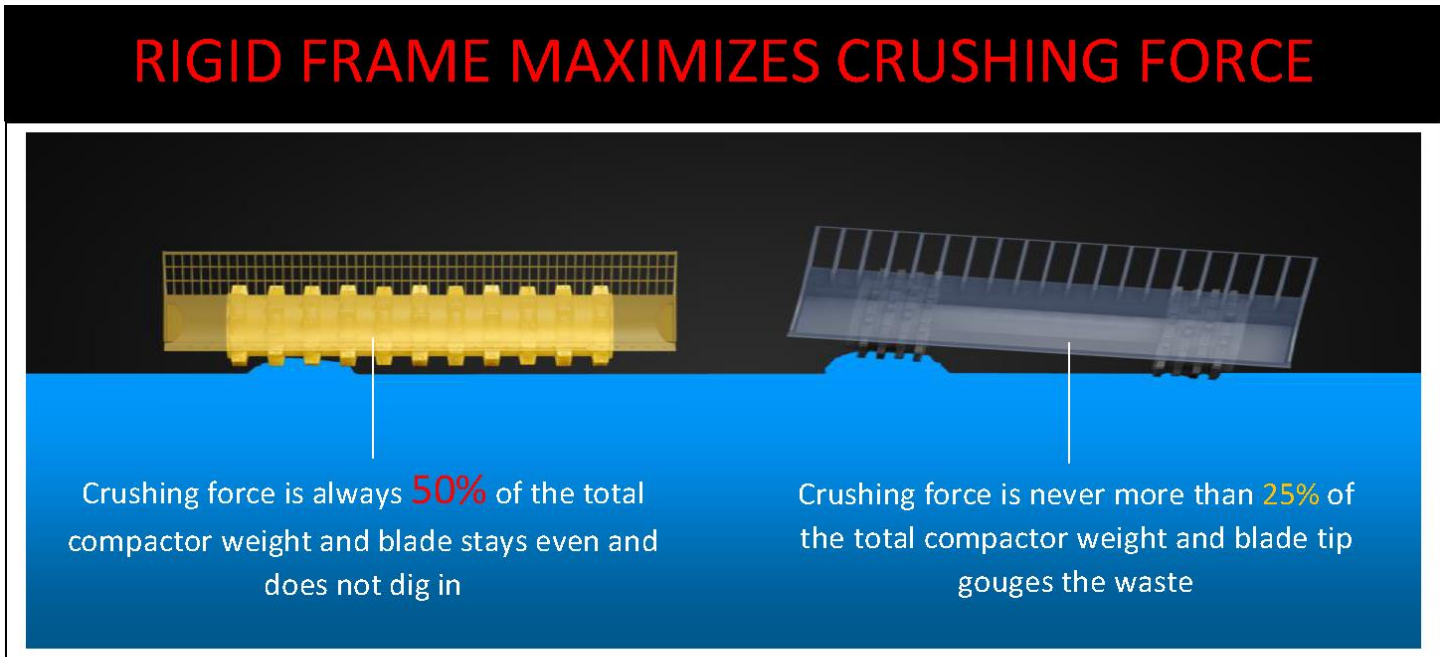

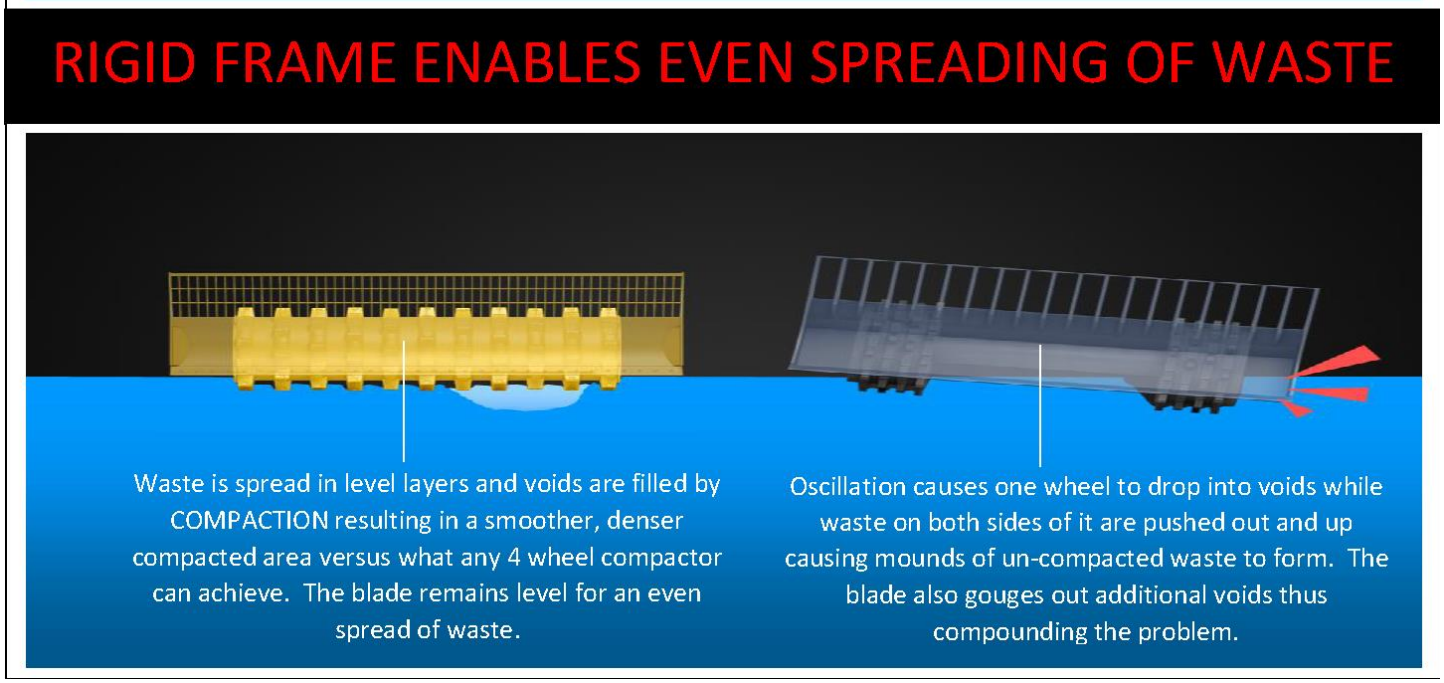

OPERATIONAL COST ADVANTAGES

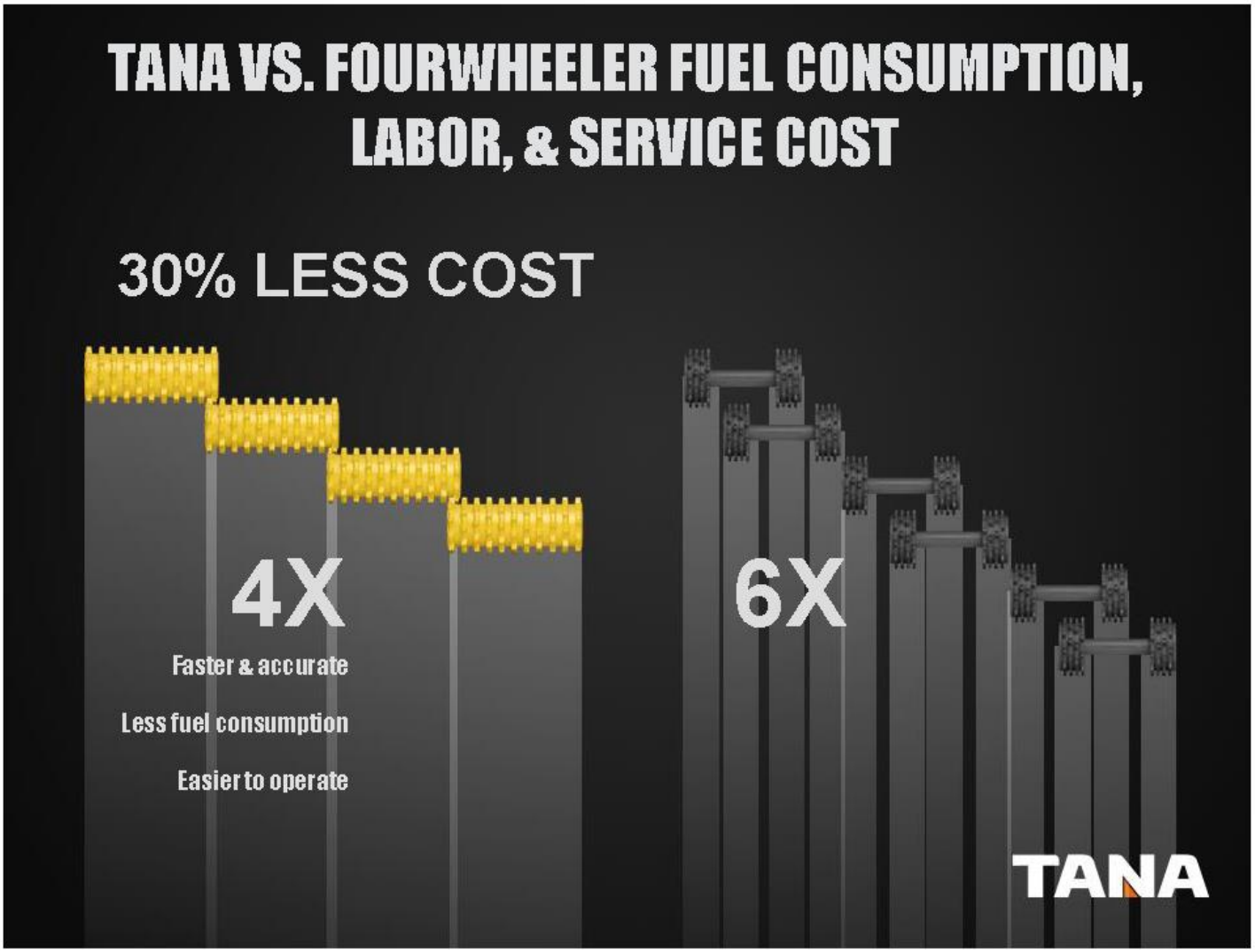

ENGINE, A/C & HEATER, WEIGHT

Tana's landfill compactors provide for the highest level of stability compared to its competitors largely due to the full width twin-drum design and the cab forward design of the compactor.

TANA'S SUPERB STABILITY

- Maximum sideways tilt angle over 50 degrees
- Climb and descent angles are only limited by available traction
- Minimum Cabin Sway due to rigid frame

TANA CONTROL SYSTEM (TCS) & PROTRACK

Tana's TCS and ProTrack reporting capabilities allow communication between the landfill compactor and the landfill's management, Tana's technical service, and any other person you desire. This system monitors all areas of the machine during operation including fuel, hydraulic oils, temperatures, alarms, etc. The information is automatically created into reports and sent to management and service so appropriate actions can be made. This system has greatly increased machine uptime and reduced maintenance cost. All critical alarms will create notifications to be sent by email or text message to management and technical service so appropriate actions can be taken.

Features:

- Wireless connection to the control system of the machine via internet
- Valuable advantages to daily operations
- Immediate connection to the control system for trouble-shooting
- Operational reports automatically by email

TANA ProTrack Service Pack

- Provides immediate technical back-up and trouble-shooting
- Minimizes traveling
- Simplifies trouble-shooting
- Ensures maximum machine uptime
- Service record always available
- Maintenance reminders sent by email
- Critical alarm notifications sent by email
- Quicker Reaction to critical alarms minimizes possible damage

TRAINING

COMPACTOR OPERATION AND MAINTENANCE TRAINING

HUMDINGER EQUIPMENT WILL PROVIDE

A. **OPERATOR TRAINING** – INITIAL TRAINING CONDUCTED DURING THE WEEK OF COMMISSIONING OF THE UNIT
B. **SERVICE TECHNICIAN TRAINING** – INITIAL TRAINING CONDUCTED DURING THE WEEK OF COMMISSIONING OF THE UNIT
C. **MANAGEMENT TRAINING** – INITIAL TRAINING CONDUCTED DURING THE WEEK OF COMMISSIONING OF THE UNIT
   1.3 **TELEMETRY SYSTEM** – TANA CONTROL SYSTEM & PROTRACK
   1.4 **GPS** – COMPACTION DENSITY MEASUREMENT -

The first day scheduled to commission the compactors will be the scheduled week of training for operators, maintenance and service staff, and management training. Humdinger Equipment will have on-site for the full week a team direct from the factory and Humdinger Equipment to conduct training in the three areas listed below. At the end of the week operators, service technicians, and management will be commissioned to effectively operate, service, and run all reporting and planning systems.

A. OPERATOR TRAINING – conducted by Humdinger Equipment and Tana North America's staff. The following is the list of the topics that will be taught to the operators as appropriate to the machine that is purchased.

1. TO THE OPERATOR . . . . . .
1.1. Operator's responsibility . . . . . .
2. COMPACTOR DESIGN. . . . . .
2.1. Intended use . . . . . .
2.2. Design . . . . . .
2.3. Type plate (CE mark) . . . . . .
2.4. Compactor's attachment, lifting, and towing points . . . . . .
2.5. Main dimensions . . . . . .
3. SAFETY INSTRUCTIONS. . . . . .
3.1. Warning symbols . . . . . .
3.2. Warnings . . . . . .
3.3. Noise level . . . . . .
3.4. Safety equipment . . . . . .
3.5. Danger areas . . . . . .
3.6. Warning signs . . . . . .
4. MACHINE DESIGN . . . . . .
4.1. Diesel engine . . . . . .
4.2. Hydraulic system . . . . . .

TRAINING

4.3. Brake system . . . . . .
4.4. Electric control and monitor system . . . . . .
4.5. Dozer blade . . . . . .
5. CABIN AND CONTROLS . . . . . .
5.1. Driver's seat . . . . . .
5.2. Cabin roller blind (optional) . . . . . .
5.3. Control switches . . . . . .
5.4. Side panel control switches . . . . . .
5.5. Air conditioning operating switches . . . . . .
5.6. LCD display . . . . . .
5.7. Control levers . . . . . .
6. DRIVING INSTRUCTIONS . . . . . .
6.1. Procedures before starting . . . . . .
6.2. Maintenance every 10 hours or daily . . . . . .
Check the coolant level. . . . . .
Check the engine oil level. . . . . .
Check/clean the air cleaner . . . . . .
Check/clean the engine air filter pre-cleaner (optional) . . . . . .
Check/clean the cooling system radiator and air conditioning condenser cores . . . . . .
Check the cooling fan blades and belts . . . . . .
Perform the daily lubrication . . . . . .
Check the hydraulic oil level . . . . . .
Check the lights and control devices . . . . . .
Check the hydraulic lines and components . . . . . .
Check the scrapers, cable cutters, and drums . . . . . .
Drain water from the water separator . . . . . .
Check the engine intake air system . . . . . .
Clean/replace the cabin air filter . . . . . .
Drain sediment from the fuel tank. . . . . .
Check the crankcase breather pipe . . . . . .
6.3. Starting the engine . . . . . .
6.4. Driving the machine . . . . . .
6.5. Stopping the engine . . . . . .
6.6. Operation techniques . . . . . .
6.7. Running the engine in . . . . . .
6.8. Running the machine in . . . . . .
7. TECHNICAL INFORMATION . . . . . .
7.1. Diesel engine . . . . . .
7.2. Crushing drums . . . . . .
7.3. Dozer blade . . . . . .
7.4. Driving hydraulics . . . . . .
7.5. Steering and dozer blade hydraulics . . . . . .
8. CAPACITIES . . . . . .
9. FILTERS . . . . . .
10. FUELS AND LUBRICANTS . . . . . .
10.1. Engine . . . . . .

TRAINING

10.2. Diesel fuel . . . . . .
10.3. Coolant . . . . . .
10.4. Final drives . . . . . .
10.5. Hydraulic systems . . . . . .
10.6. Lubricating greases . . . . . .
10.7. Central lubrication system . . . . . .
12. DIESEL ENGINE FAULT CODES. . . . . .
12.2. Fault codes, TANA E320, and E380 (Cummins QSM11 -engine) . . . . . .
12.3. Fault codes, TANA E450, and E520 (Caterpillar C15 -engine) . . . . . .
12.4. Event codes, TANA E450, and E520 (Caterpillar C15 -engine) . . . . . .

B. MAINTENANCE & SERVICE TRAINING – conducted by Humdinger Equipment and Tana North America's staff. The following is the list of the topics that will be taught to the service technicians as appropriate to the machine that is purchased.

1. TO THE SERVICE ENGINEER . . . . . .
1.1. Responsibility of servicing personnel . . . . . .
1.2. General . . . . . .
1.3. Periodic maintenance . . . . . .
2. SAFETY. . . . . .
2.1. Warning symbols . . . . . .
2.2. Warnings . . . . . .
3. MAINTENANCE SCHEDULES . . . . . .
3.1. Use of the maintenance schedules . . . . . .
3.3. Maintenance record: TANA E320, and E380 . . . . . .
3.4. Maintenance record: TANA E450, and E520 . . . . . .
3.6. Maintenance schedule: TANA E320, and E380 . . . . . .
3.7. Maintenance schedule: TANA E450, and E520 . . . . . .
4. SERVICE ITEMS . . . . . .
Check the electrolyte level in the batteries . . . . . .
Check the final drive oil levels . . . . . .
Check the cooling system. . . . . .
Check/add washer fluid . . . . . .
Lubricate the drum bearings (TANA E380) . . . . . .
Check the earth terminal of the electrical components (Caterpillar engine) . . . . . .
Replace the pre-filter element of the fuel system (water separator) (Caterpillar engine)
Replace the secondary filter of the fuel system (Caterpillar engine) . . . . . .
Check/adjust the valve clearances and injectors (Caterpillar engine) . . . . . .
Change the engine oil and filter . . . . . .
Clean the batteries and check their charge . . . . . .
Change the final drive oils . . . . . .
Drain water from the hydraulic oil tank . . . . . .
Replace the charge pressure filters of the driving hydraulics . . . . . .
Replace the breather filter of the hydraulic oil tank. . . . . .
Clean the machine with steam or a high-pressure washer. . . . . .
Check the antifreeze and SCA concentration of the coolant (Cummins engines) . . . . . .
Lubricate the hinges and locks . . . . . .
Check/adjust/replace belts (Caterpillar engine) . . . . . .
Check the starter motor (Caterpillar engine). . . . . .

TRAINING

Check the turbocharger (Caterpillar engine). . . . . .
Check the water pump (Caterpillar engine) . . . . . .
Replace the fuel filter (Cummins engines) . . . . . .
Replacing the coolant filter (Cummins engines) . . . . . .
Check the operation of the automatic belt-tightening system (Cummins) . . . . . .
Change the hydraulic oil . . . . . .
Replace the return filter of the hydraulics . . . . . .
Check the mounting of the engine . . . . . .
Check the engine hoses and connections . . . . . .
Check the final drive coolant. . . . . .
Adjust the valves and fuel injectors (Cummins engines) . . . . . .
Replace the filling filter of the hydraulic tank . . . . . .
Check the articulation link. . . . . .
Check the dozer blade and machine frame . . . . . .
Check the mounting of the final drives . . . . . .
Check the drum bearings (TANA E260, E320, and E380). . . . . .
Clean the crankcase breather pipe (Caterpillar engine) . . . . . .
Add life extender for long-life coolant (Caterpillar engine) . . . . . .
Replace the coolant thermostat (Caterpillar engine) . . . . . .
Check the protective systems of the engine (Caterpillar engine) . . . . . .
Check the vibration damper of the crankshaft (Caterpillar engine). . . . . .
Check/adjust the injectors (Caterpillar engine) . . . . . .
Check/clean/calibrate the engine’s speed and timing sensors (Caterpillar engine) .
Check/adjust the valve clearances (Caterpillar engine) . . . . . .
Check the rotators of the engine valves (Caterpillar engine) . . . . . .
Lubricate the fan actuator bearing (Caterpillar engine) . . . . . .
Check the power train (Caterpillar engine) . . . . . .
Check the fan hub and pulleys (Cummins engine) . . . . . .
Flush the cooling system (Cummins engines) . . . . . .
Check the turbocharger (Cummins engines) . . . . . .
Replace the fan actuator bearing (Caterpillar engine) . . . . . .
Change the coolant (ELC) (Caterpillar engine). . . . . .
5. GENERAL MAINTENANCE INSTRUCTIONS . . . . . .
5.1. Final drive cooling . . . . . .
5.2. Steering lock . . . . . .
6. FUSES. . . . . .
6.2. Main fuse, TANA E320, and E380 . . . . . .
6.3. Main fuse, TANA E450, and E520 . . . . . .
6.4. Fuses and relays in the front frame, all models . . . . . .
6.5. Fuses and relays in the rear frame, all models . . . . . .
7. HYDRAULIC PRESSURE TEST POINTS . . . . . .
8. TECHNICAL INFORMATION . . . . . .
8.1. Diesel engine . . . . . .
8.2. Crushing drums . . . . . .
8.3. Dozer blade . . . . . .
8.4. Driving hydraulics . . . . . .

TRAINING

8.5. Steering and dozer blade hydraulics . . . . . .
9. CAPACITIES . . . . . .
10. FILTERS . . . . . .
11. FUELS AND LUBRICANTS . . . . . .
11.1. Engine . . . . . .
11.2. Diesel fuel . . . . . .
11.3. Coolant . . . . . .
11.4. Final drives . . . . . .
11.5. Hydraulic systems . . . . . .
11.6. Lubricating greases . . . . . .
11.7. Central lubrication system . . . . . .
12. DISPOSAL OF THE MACHINE. . . . . .
13. HYDRAULIC DIAGRAMS . . . . . .
13.2. Driving hydraulics, TANA E320, E380, E450, and E520 . . . . . .
13.4. Auxiliary hydraulics, TANA E320, E380, E450, and E520 . . . . . .
14. ELECTRIC DIAGRAMS . . . . . .
14.1. Control panel, identification for the electrical drawings . . . . . .
14.2. Electrical cabinet - front, identification for the electrical drawings . . . . . .
14.3. Electrical cabinet - rear, identification for the electrical drawings . . . . . .
14.4. Electric diagrams . . . . . .
14.5. I/O-list, cabin module . . . . . .
14.6. I/O-list, frame module . . . . . .
14.7. Electrical diagram explanations . . . . . .
15. DIESEL ENGINE FAULT CODES. . . . . .
15.2. Fault codes, TANA E320, and E380 (Cummins QSM11 -engine) . . . . . .
15.3. Fault codes, TANA E450, and E520 (Caterpillar C15 -engine) . . . . . .
15.4. Event codes, TANA E450, and E520 (Caterpillar C15 -engine) . . . . . .
WARRANTY INSPECTION/SERVICING, 50 OPERATING HOURS . . . . . .

MANAGEMENT TRAINING -- conducted by Humdinger Equipment and Tana North America's staff. The following is the list of the topics that will be taught to the service technicians as appropriate to the machine that is purchased.

1. TO THE MANAGEMENT . . . . . .
1.1 Overview of operator training
1.2 Overview of service technician training
1.3 Telemetry system – Tana Control System and ProTrack System Operations and reporting capabilities
1.4 GPS – (compaction density measurement) System Operations and Reporting Capabilities

C) Factory Training is available in any of these areas at our Lubbock, Texas location.

TMR SERVICES AND RECONDITIONING DETAILS

TMR Services include the following list of actions to be performed based on the hourly meter. In addition to the list of actions to be completed every 250 hour increment, the machine will be inspected for any unplanned repairs or adjustments that need to be made.

Every 250 Hours (250, 500, 750, 1000...)

Change Engine Oil and Filter
Grease complete unit
Change Fuel Pre-Filter Element
Change Secondary Fuel Filter
Change Cab Pre-Clean Air Filter
Check Belly Pan, Engine Area, Cab Area, Drum Wells and Remove Debris
Check Scraper Bars (Main Teeth and Side Scrapers) – Adjust/Replace as Needed
Check Batteries
Check Final Drive Oil Levels
Check Coolant System
Check/Add Washer Fluid
Check Ground on Electrical Circuits
Clean Crankcase Breather Pipe
Clean Radiators

Every 500 Hours (500, 1000, 1500…)

Complete 250 Hour PM PLUS
Check/ Change Engine Air Filter #1
Change Charge Pressure Filter on Hydraulics
Change Hydraulic Breather Filter
Change Cabin Main Air Filter
Change Final Drive Gear Oil
Drain Water from Hydraulic Oil Tank Separator
Lubricate Hinges and Locks
Check/Replace/Adjust Belts

Every 1500 Hours (1500, 3000…)

Complete 250 and 500 Hour PM's PLUS
Change Engine Air Filter #2
Change Coolant Filter
Change Hydraulic Return Filter
Change Hydraulic Oil
Check Engine Mounts
Check Final Drive Coolant

TANA North America
From Waste to Value

TMR SERVICES AND RECONDITIONING DETAILS

Every 3000 Hours (3000, 6000, 9000)

Complete 250, 500 and 1500 Hour PM's PLUS
Replace Hydraulic Tank Filling Filter
Check Hydraulic System (Cylinders, Valves and Fittings)
Check Articulation Link
Check Dozer Blade
Check Main Frame
Check Final Drive Mounts

Every 6000 Hours

Complete 250, 500, 1500 and 3000 Hour PM's PLUS
Flush Coolant System and Add New Long Life Antifreeze
Check/Replace Muffler, Exhaust Pipes, Flex Components, and Clamps

TANA
North America
From Waste to Value

TANA
North America
From Waste to Value®

ECO E SERIES

THE MOST PRODUCTIVE COMPACTOR ON THE MARKET

Unique design
Twin drums Fewer passes, smooth and dense surface
Rigid frame Best crushing force
Crushing teeth Size, shape and number optimized to achieve maximum compaction

TANA ProTrack® To minimize downtime and reduce cost

HOW WE GUARANTEE IT

BENEFITS OF TANA COMPACTORS

Improves profits through increased revenues and / or reduced expenses

- Greatly extends the life of the landfill
- Improves all vehicle cycle time in and around tipping area
- Reduces amount of lechate created
- Reduces landslides and cave-ins
- 40-60% less cover soil required because of even surface
- Greatly reduces risk of fire
- Reduced chassis damage to all vehicles on site - smooth compacted surface

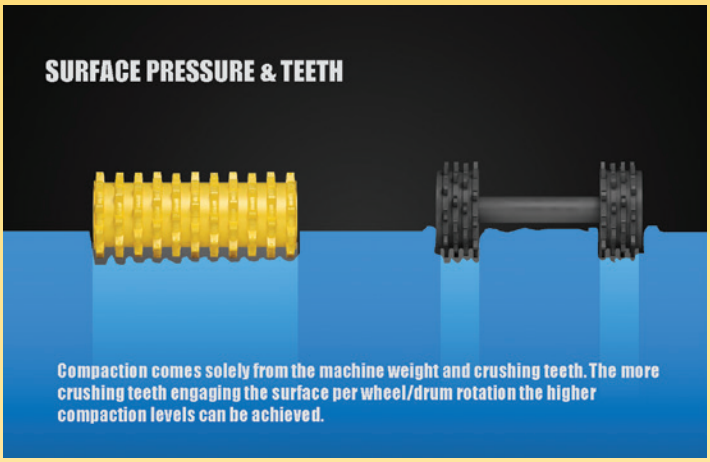

TWIN DRUMS PROVIDE FULL WIDTH

Compaction and Even Surface

- Reduces waste blow-out created by wheeled compactors
- Compaction achieved quicker because operator does not have to go over and over and over the mounds often creating more problems in the process
- Maximum compaction is achieved in less time
- 15-25% more waste compacted per sq. yard with the twin drum technology
- 30-40% less time to compact area results in savings of fuel, labor, and service

TANA ROLLER COMPACTION (TRC) METHOD

- Two full-width passes creating uniform compaction
- Maximum capacity tons per hour
- Excellent traction with no loss of compaction force
- Smooth, level surface
- High spots get maximum force applied while blade does not dig in
- No cabin swing or weight shift
- 160 to 220 cleats per compactor maximizing crushing force
- Even load spreading providing maximum compaction
- 28 to 40 scraper bars keep drums clean and 8 wire cutters eliminate wrapping

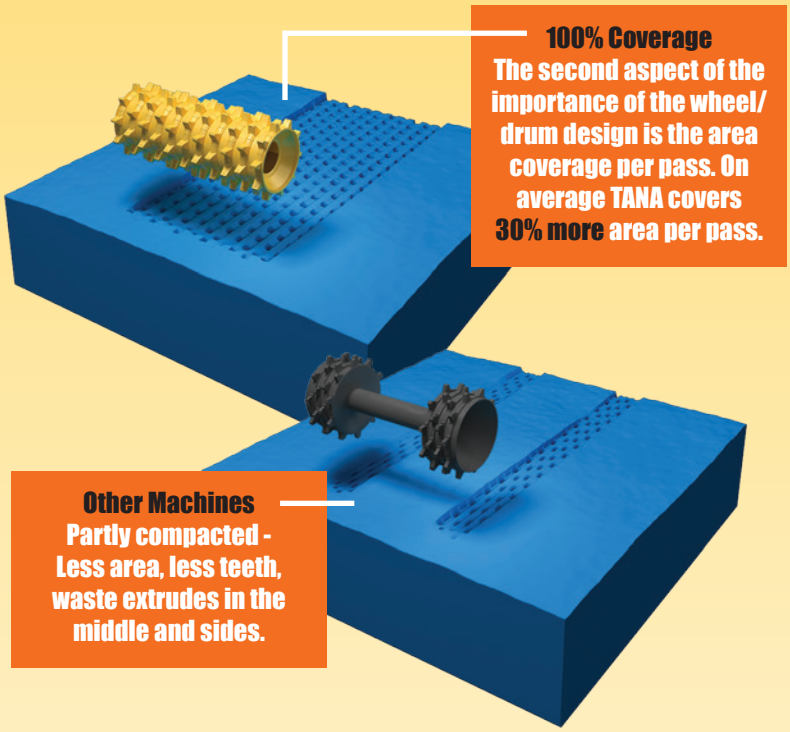

RIGID FRAME MAXIMIZES CRUSHING FORCE

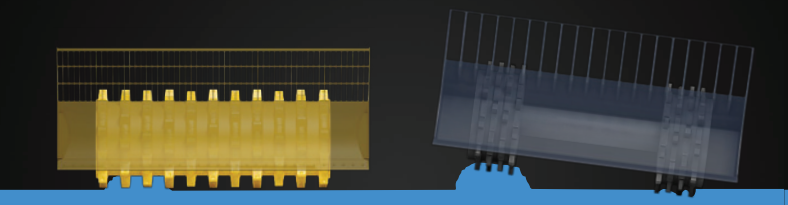

Crushing force is always **50%** of the total compactor weight and blade stays even and does not dig in

Crushing force is never more than **25%** of the total compactor weight and blade tip gouges the waste

RIGID FRAME ENABLES EVEN SPREADING

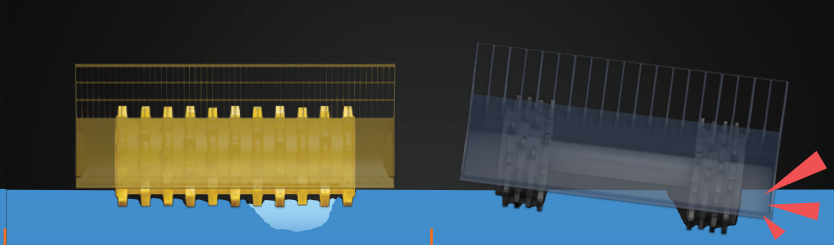

Waste is spread in level layers and voids are filled by COMPACTION resulting in a smoother, denser compacted area versus what any wheeled compactor can achieve. The blade remains level for an even spread of waste

Oscillation causes one wheel to drop into voids while waste on both sides of it are pushed out and up causing mounds of un-compacted waste to form. The blade also gouges out additional voids thus compounding the problem

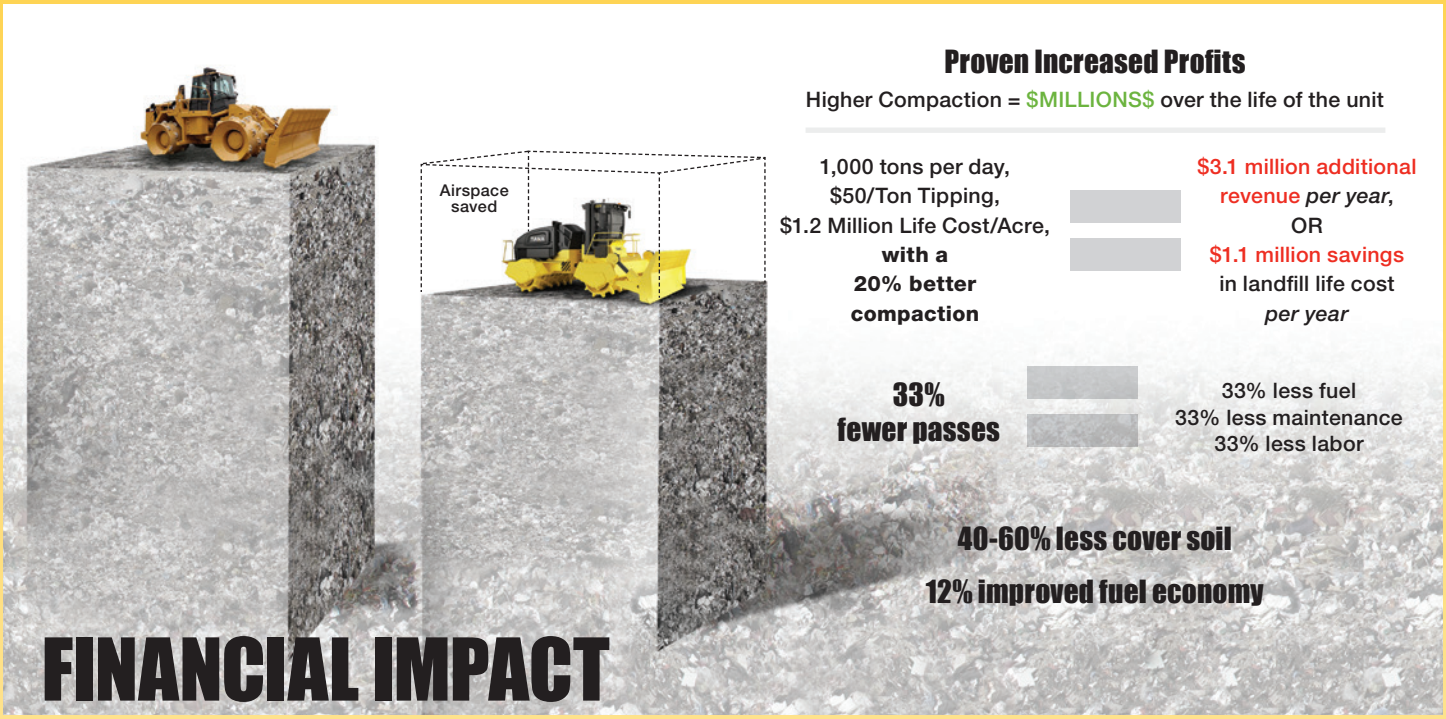

FINANCIAL IMPACT

Proven Increased Profits

Higher Compaction = $MILLIONS$ over the life of the unit

1,000 tons per day,
$50/Ton Tipping,
$1.2 Million Life Cost/Acre,
with a 20% better compaction

$3.1 million additional revenue *per year*,
OR
$1.1 million savings in landfill life cost *per year*

33% fewer passes

33% less fuel
33% less maintenance
33% less labor

40-60% less cover soil

12% improved fuel economy

STATE OF THE ART INFORMATION MANAGEMENT SYSTEM

Maximum uptime

- Remote access for quicker and more accurate trouble shooting by customer and TANA technical support
- Critical alarm notifications can be sent to multiple people by e-mail
- Reminders for scheduled maintenance can be sent to multiple people by e-mail

Operational Cost Analysis through TANA ProTrack® reports (additional option)

- Monthly operational reports provided through e-mails, e.g. working hours, fuel consumption, work load…

PROTRACK INTERFACE

Reports

Alarms

Upcoming maintenances

Fleet management

Operating hours

Real-time view

Fault finding

Quick support for your unit

A SMART GPS SOLUTION FOR EFFICIENT LANDFILL MANAGEMENT

Optimized landfill space usage and efficient volume reduction

- A digitally imported filling plan gives the operator a real-time view of density compaction results through a color 3D interface
- Colored squares indicate density compaction goal has been achieved

Increased profits realized

- Reduction in the number of passes will reduce the total fuel consumption while achieve maximum density compaction
- Machine uptime is increased through reduced idle time and unplanned transfers
- All data is sent to TANA ProTrack® where reports can be generated and combined with other operational information
- Results in flatter surfaces and uniform density compaction on the entire landfill

Effortless use

- Crisp, color touch screen, Windows-based software
- Online downloading of work plans and software updates
- Remote connection results in quicker trouble-shooting and problem solving capabilities
- Updates and corrective action instructions are available real-time through the computer display as long as internet connection is available

TANA'S HYDROSTATIC SYSTEM VS. POWER SHIFT TRANSMISSION

The TANA Design:

- Two Pumps
- 2, 3 or 4 Final Drives & Motors

TANA's Design Eliminates:

- Torque converter
- Power shift transmission
- Transfer gearbox
- Drive shafts & universal joints
- 2 differentials
- Disc Brakes (Service)
- Complicated control systems
- Clutch Pedal & Clutch
- Brake Pedal & Controllers

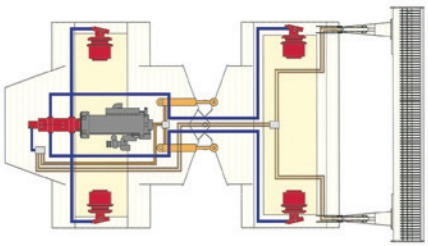

TANA'S EXCELLENT GROUND CLEARANCE – BEST IN THE MARKET

- Over 35 Inches of Ground Clearance
- No Belly Pan build-up of waste
- No build-up of waste in the belly pan creating fire hazards
- No power train shut downs due to debris in the power pack
- No vulnerable spaces or belly pans between axle ends

100% JOYSTICK CONTROL

- Easiest Operational Control System
- No Foot Controls

RESULTS: TANA'S simple hydrostatic system allows for a more efficient operator, less downtime and an overall cost advantage that is not possible with a power shift mechanical drive

TANA'S SERVICE ADVANTAGE

- Easy access to all service locations
- Unobstructed walk-around on deck level

TANA'S SUPERB STABILITY

- Maximum sideways tilt angle of over 50 degrees
- Climb and descent angles are only limited by available traction
- Minimum Cabin Sway due to rigid frame

TANA'S CAB-FORWARD DESIGN

- Cab is mounted to the front frame
- Weight is equally distributed to each drum
- Noise level only 72.5 dB – lowest in the market
- Improved visibility out of rear window
- Design allows more efficient blade operation
- Full visibility of the blade at any articulation
- Operator can always see bottom of blade for optimal spreading
- Improved all-around visibility
- Improved safety with better visibility

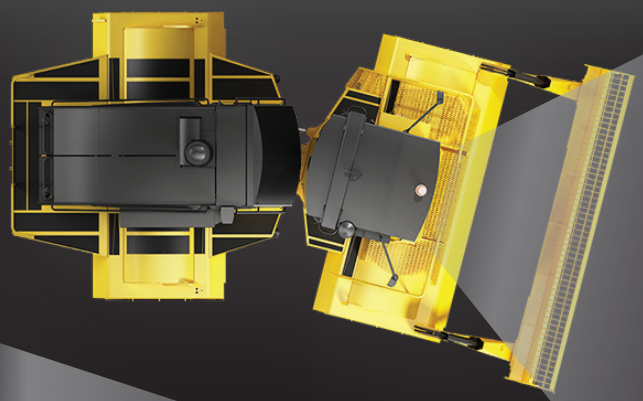

CABIN AND CONTROLS

- Pressurized, heat and sound insulated cabin with cabin lights
- Insulation materials in accordance with ISO 3795 - 72.5 dB(A)
- Air-suspended swiveling operator's seat with head rest, built-in controls, heated seat and seat belt
- Laminated safety glass windows with sun visor
- Socket for mobile phone charger, radio/CD/USB player
- Front and rear windshield wipers and washers
- Heater and A/C unit
- Emergency exit, lockable door, shelf and lockers, external rear-view mirrors, foot support, inside mirror
- Replaceable cabin air filters, pre-filter grade EU3, micro filter grade EU7, and optional grade EU14 and active carbon filters

Gauges included in TANA Control System (TCS)

- Engine oil pressure, engine intake manifold, engine oil and hydraulic oil temperature, engine coolant
- Final drive planetary temperature
- Fuel level, total fuel consumption
- Voltage, tachometer, boost pressure, engine working hours
- Engine load rate

System warnings included in TCS (indicator light, audible warning and alarm log)

- Engine air filter contamination
- Hydraulic oil temperature, low hydraulic level, high hydraulic oil contamination, and hydraulic oil return line filter contamination
- Charge pressure filter contamination and low charge pressure
- Additional alarms total more than 500.

Controls

- Transmission on/off and parking brake
- Emergency shut down
- Ignition switch: power on/off and starting
- Heater and air conditioning unit, cabin temperature control
- Windshield wipers and washers, lights

Joystick controls integrated in arm-rests

- Control levers will return to neutral position automatically when released and all related movements will stop
- Programmable joysticks control driving speed, direction, steering, dozer blade, and horn

COMPACTION DRUMS

Uniform full width drums with forged solid steel crushing teeth. Adjustable scraper bars on both sides of the drums and adjustable steel wire cutters in the ends of drums.

HYDRUALIC CYLINDERS

Interchangeable cylinders equipped with spherical bearings, hardened pins and auto lubrication

FRAME

The drum frame acts as a shell around the drum, which helps to prevent waste rising into the upper parts of the machine.
Angle of articulation: left 40 degrees; right 40 degrees

SERVICE PLATFORMS AND PROTECTION

Service platforms and steps are equipped with handrails and non-slip safety surfaces. Engine housing is protected with lockable hoods that swing open out of the way, exposing all engine components for easy access.

VANDALISM PROTECTION

- Lockable cabin, engine compartment and fuel tank filling cap
- Electronic key for ignition

ENGINE

- See specifications on page 7
- 1 piece fuel filter and water separator / 1 piece oil filter
- Landfill designed radiator
- Starter motor 24V / Alternator 24V, 70A

ROPS / FOPS

- ROPS and FOPS in accordance with ISO 3471:2008 and 3449:2005

BRAKES

- Service brakes: hydrostatic transmission acts as service brakes, a separate circuit for each drum
- Parking/emergency brakes: hydraulically released, spring-actuated, multi-disk brake integrated into planetary system

AUXILIARY HYDRAULICS

Controls for steering and blade operation

HYDRAULIC OIL TANK

The hydraulic oil tank is protected inside the engine hood

- Electric filling pump with filter
- Breather filter

FUEL TANK & UREA TANK

The 201 gallon (760 liter) fuel tank is protected under the cabin and is equipped with a suction strainer, drain cock, and level sensor.
The 14 gallon (56 liter) urea tank is protected inside the rear frame and is equipped with a suction strainer and level sensor.

ELECTRICAL EQUIPMENT

- 24 VDC system
- Batteries 12V 170Ah, 2 pcs
- Lights: front 4 pcs, rear 4 pcs
- Horn
- Socket for hand light in engine compartment
- Back-up alarm, main circuit breaker, voltage reducer for radio

POWER TRANSMISSION

- Closed circuit, hydrostatic transmission
- Separate systems for both drums
- Two speed ranges with infinite variable speed control

Pumps

- One tandem axial pump arrangement
- Variable displacement with electrical proportional control

Motors

- Two, three, or four variable displacement plug-in motors

Cooling of hydraulic system

- Air-operated oil cooler
- Removable air filtration screen

Final drive planetary system

- Transmits hydraulic output to the drums
- Three-stage planetary gearboxes (2 pcs)
- Splash lubrication system

For details, please contact Tana North America or visit their website at www.tana-na.com

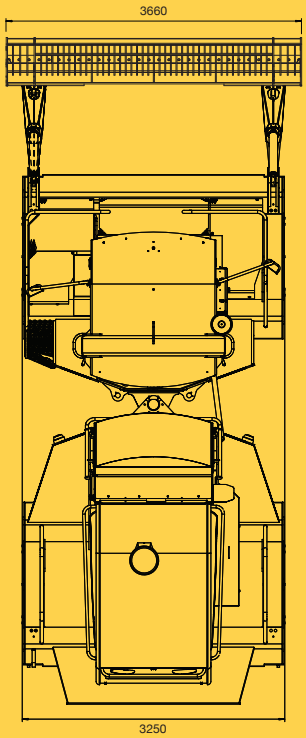

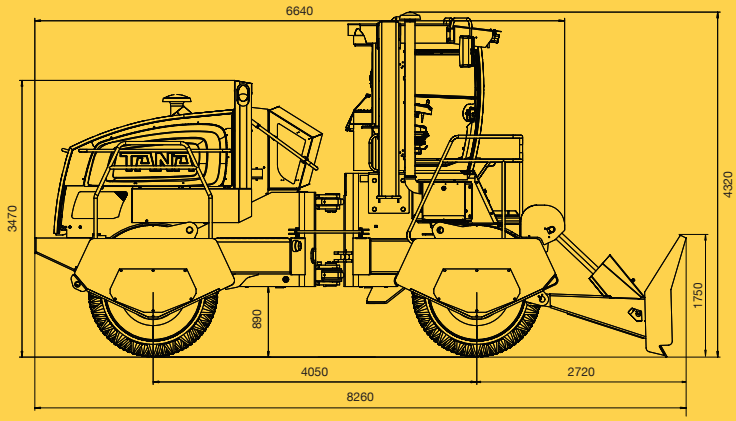

E260 & E320

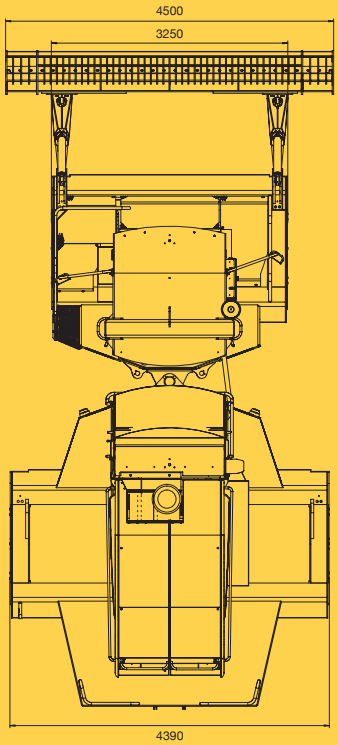

OVER 1,500 LANDFILLS AROUND THE WORLD ARE USING TANA COMPACTORS

E380

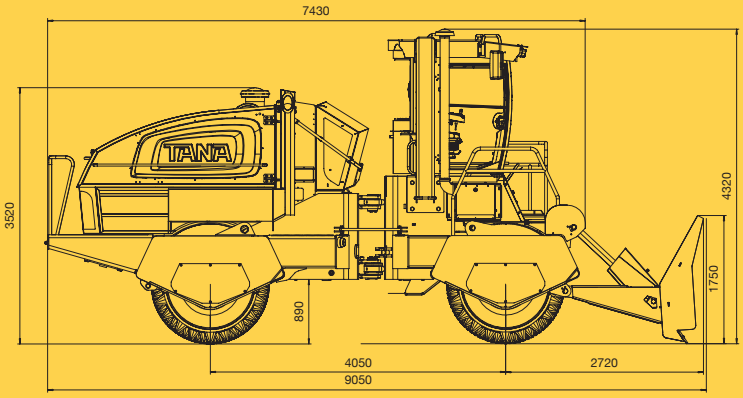

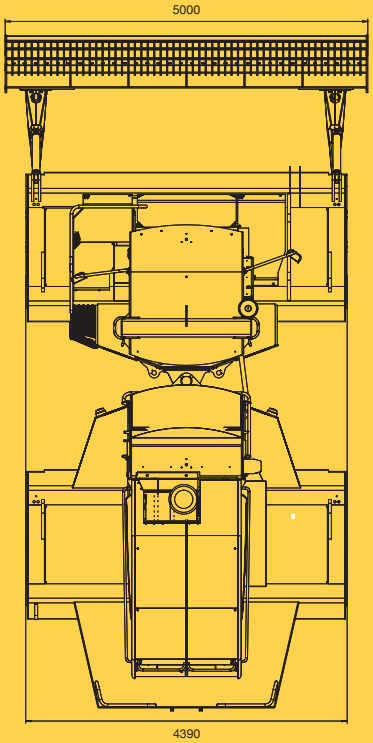

E450 & E520

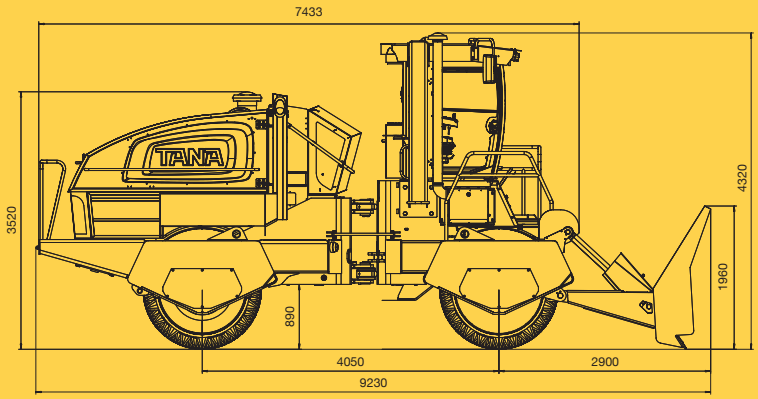

Measurements in Millimeters

GENERAL SPECIFICATIONS	E260 ECO	E320 ECO	E380 ECO	E450 ECO	E520 ECO
Operating Weight	57,321 lbs (26,000 kg)	70,548 lbs (32,000kg)	83,775 lbs (38,000kg)	99,208 lbs (45,000kg)	115,000-121,000 lbs (52,000-55,000kg)
Total Length	325 inches (8,260 mm)	325 inches (8,260 mm)	356 inches (9,050 mm)	363 inches (9,230 mm)	363 inches (9,230 mm)
Total Width	144 inches (3,600 mm)	144 inches (3,600 mm)	177 inches (4,500 mm)	197 inches (5,000 mm)	197 inches (5,000 mm)
Total Height	170 inches (4,320 mm)	170 inches (4,320 mm)	170 inches (4,230 mm)	170 inches (4,320 mm)	170 inches (4,320 mm)
Wheel Base	160 inches (4,050 mm)	160 inches (4,050 mm)	160 inches (4,050 mm)	160 inches (4,050 mm)	160 inches (4,050 mm)
Ground Clearance	35 inches (890mm)	35 inches (890mm)	35 inches (890mm)	35 inches (890mm)	35 inches (890mm)
Length Without Dozer Blade	261 inches (6,440 mm)	261 inches (6,440 mm)	293 inches (7,430 mm)	293 inches (7,430 mm)	293 inches (7,430 mm)
Width Without Dozer Blade	128 inches (3,250 mm)	128 inches (3,250 mm)	173 inches (4,390 mm)	173 inches (4,390 mm)	173 inches (4,390 mm)
Inside Turning Radius	153 inches (3,880 mm)	153 in (3,880 mm)	130 inches (3,310 mm)	130 inches (3,310 mm)	130 inches (3,310 mm)
Driving Speed Ranges	0-4.5 mph (0-7 km/h)	0-4.5 mph (0-7 km/h)	0-4.5 mph (0-7 km/h)	0-4.5 mph (0-7 km/h)	0-4.5 mph (0-7 km/h)
Crushing Force	28,551 lbs (127 kN)	35,295 lbs (157 kN)	41,815 lbs (186 kN)	49,683 lbs (221kN)	57,327 lbs (255 kN)
COMPACTION DRUMS	FRONT / REAR DRUM	FRONT / REAR DRUM	FRONT / REAR DRUM	FRONT / REAR DRUM	FRONT / REAR DRUM
Crushing/ Compaction Width	105 inches (2,660 mm) / 105 inches (2,660 mm)	105 inches (2,660 mm) / 105 inches (2,660 mm)	105 inches (2,660 mm) / 150 inches (3,800 mm)	150 inches (3,800 mm) / 150 inches (3,800 mm)	150 inches (3,800 mm) / 150 inches (3,800 mm)
Diameter	64 inches (1,620 mm)	64 inches (1,620 mm)	64 inches (1,620 mm)	64 inches (1,620 mm)	64 inches (1,620 mm)
No. of Feet Front/Rear	80/80 pcs	80/80 pcs	80/110 pcs	110/110 pcs	110/110 pcs
Height of Feet	8 inches (200 mm)	8 inches (200 mm)	8 inches (200 mm)	8 inches (200 mm)	8 inches (200 mm)
No. of Scapers Bars (Front/Rear)	14/14 pcs	14/14 pcs	14/20 pcs	20/20 pcs	20/20 pcs
No. of Wirecutters (Front/Rear)	4/4 pcs	4/4 pcs	4/4 pcs	4/4 pcs	4/4 pcs
DOZER BLADE	TANA straight blade, trash screen, reversible cutting edges	TANA straight blade, trash screen, reversible cutting edges	TANA straight blade, trash screen, reversible cutting edges	TANA straight blade, trash screen, reversible cutting edges	TANA straight blade, trash screen, reversible cutting edges
Width	144 inches (3,660 mm)	144 inches (3,660 mm)	177 inches (4,500 mm)	197 inches (5,000 mm)	197 inches (5,000 mm)
Height	69 inches (1,750 mm)	69 inches (1,750 mm)	69 inches (1,750 mm)	77 inches (1,960 mm)	77 inches (1,960 mm)
Movement Above Ground Level	46 inches (1,170 mm)	46 inches (1,170 mm)	46 inches (1,170 mm)	48 inches (1,230 mm)	48 inches (1,230 mm)
Movement Below Ground Level	6 inches (150 mm)	6 inches (150 mm)	6 inches (150 mm)	6 inches (150 mm)	6 inches (150 mm)
POWER PACK					
Engine	Cummins QSL9-C265, 265 HP (198kW)/2,000 rpm	Cummins QSL9-C320, 345 HP (257 kW)/2,000 rpm	Cummins QSX15-C450, 450 HP (336 kW)/2,100 rpm	Cummins QSX15-C535, 580 HP (433 kW)/1,800 rpm	Cummins QSX15-C535, 580 HP (433 kW)/1,800 rpm
Power Rating (SAE J1995)	265 HP (198kW)@2,000 rpm	320 HP (239kW)@2,200 rpm	450 bhp (336kW)@2,100 rpm	535 bhp (399kW)@2,100 rpm	535 bhp (399 kW)@2,100rpm
Displacement	8.9 L	8.9 L	15 L	15 L	15 L
Engine Data	Six cylinder, turbocharger and aftercooler, liquid cooled, EU STAGE IV, US EPA Tier 4F, CARB TIER 4	Six cylinder, turbocharger and aftercooler, liquid cooled, EU STAGE IV, US EPA Tier 4F, CARB TIER 4	Six cylinder, turbocharger and aftercooler, liquid cooled, EU STAGE IV, US EPA Tier 4F, CARB TIER 4	Six cylinder, turbocharger and aftercooler, liquid cooled, EU STAGE IV, US EPA Tier 4F, CARB TIER 4	Six cylinder, turbocharger and aftercooler, liquid cooled, EU STAGE IV, US EPA Tier 4F, CARB TIER 4
Hydrostatic Transmisison	Sauer-Danfoss	Bosch Rexroth	Bosch Rexroth	Bosch Rexroth	Bosch Rexroth
Power Transmission Pumps	1 tandem pump: variable displacement axial piston pumps with electrical proportional control	1 tandem pump: variable displacement axial piston pumps with electrical proportional control	1 tandem pump: variable displacement axial piston pumps with electrical proportional control	1 tandem pump: variable displacement axial piston pumps with electrical proportional control	1 tandem pump: variable displacement axial piston pumps with electrical proportional control
Power Transmission Motors	2 variable displacement plug-in motors	2 variable displacement plug-in motors	3 variable displacement plug-in motors	4 variable displacement plug-in motors	4 variable displacement plug-in motors
Fuel Tank	201 gallons (760 liters)	201 gallons (760 liters)	201 gallons (760 liters)	201 gallons (760 liters)	201 gallons (760 liters)
Urea Tank	14 gallons (56 liters)	14 gallons (56 liters)	14 gallons (56 liters)	14 gallons (56 liters)	14 gallons (56 liters)
Replaceable Cabin Air Filtration Grade	Pre-filter grade EU3, Micro filter grade EU7, Grade EU14 (option), Active carbon filter (option)	Pre-filter grade EU3, Micro filter grade EU7, Grade EU14 (option), Active carbon filter (option)	Pre-filter grade EU3, Micro filter grade EU7, Grade EU14 (option), Active carbon filter (option)	Pre-filter grade EU3, Micro filter grade EU7, Grade EU14 (option), Active carbon filter (option)	Pre-filter grade EU3, Micro filter grade EU7, Grade EU14 (option), Active carbon filter (option)
Service Brakes	Hydrostatic transmisson acts as service brakes with dual circuit parking brakes	Hydrostatic transmisson acts as service brakes with dual circuit parking brakes	Hydrostatic transmisson acts as service brakes with dual circuit parking brakes	Hydrostatic transmisson acts as service brakes with dual circuit parking brakes	Hydrostatic transmisson acts as service brakes with dual circuit parking brakes

FIRST LANDFILL IN NORTH AMERICA WITH A TANA E-SERIES LANDFILL COMPACTOR

Glenmore Landfill's Life Expectancy Increased by 12-15 Years

For increasing the compaction efficiency, the landfill purchased a Tana E520 landfill compactor. According to the Solid Waste Supervisor, Ken Muller, they have increased their density over 20 percent after the first few months of operation. At the end of two years of operation the landfill has improved densities from .7 tons per cubic meter to 1.1 tons per cubic meter (57% improvement) over the previously 4-wheel landfill compactor of the same weight class.

"Because of the full width twin drums and the width of the whole machine, just one pass compacts everything under it. We used to drive over an area three times before we hit our maximum space between the wheels that you'd have to slide over half a width of the unit to get that material done. The Tana unit is giving us much better compaction and we burn less fuel because we don't have to run the unit as much. We no longer have to drive it eight hours per day. We drive it three hours per day and get a better compaction. Compaction has been improved 57%, machine operational time and fuel usage has been decreased from three hours to eight hours or a 62.5% reduction." Says Muller.

Since changing from a four-wheel compactor to the twin drum design of Tana E520, the use of cover soil has been decreased greatly. Rather than using six inches of cover soil daily, the new operation with the Tana compactor only requires a quarter-inch of fiber mulch. "It saves us a considerable amount of airspace over the year," says Muller.

The City of Kelowna sees the new Tana E520 Compactor as an investment. "It's playing a big part on the operations and has shown remarkable improvements over the ineffectiveness caused by previous compactors. It's a completely different configuration and concept in landfill compaction and it seems to be working well. The unit is giving us much better compaction as we burn less fuel because we don't have to run the unit as much," stated Muller.

Currently generating revenues of $12 million a year, the City is expecting up to $180 million more from the landfill with the new, improved operations using the Tana E520 while reducing their operating cost by over 62.5 percent.

Capital News, June 13th, 2013 | Environmental XPRT, December 19, 2014

TANA North America

From Waste to Value

Tana North America
3202 Clovis Road
Lubbock, Texas 79415
Telephone: 806-771-9944
Fax: 806-771-9945
Email: sales@tana-na.com

www.tana-na.com | www.tanarecycling.com

HUMDINGER EQUIPMENT®

DESIGNED TO IMPROVE YOUR BOTTOM LINE

SHARK 220ECOD / 440ECOD Semi-trailer

SHARK 220ECODT / 440ECODT On Tracks

SHARK 440E Stationary Electric

SHARK 440EM Semi-Trailer Electric

TANA SHARK Shredders

Unique Versatility

TANA North America

From Waste to Value®

TANASHARK – Increase profits and operational versatility

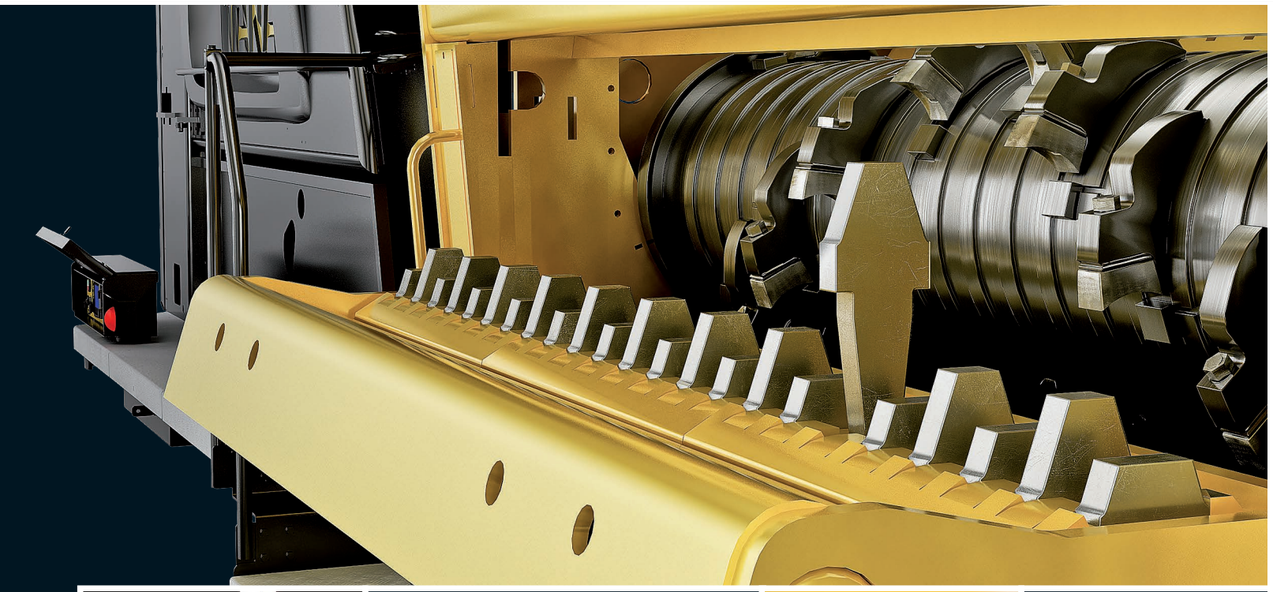

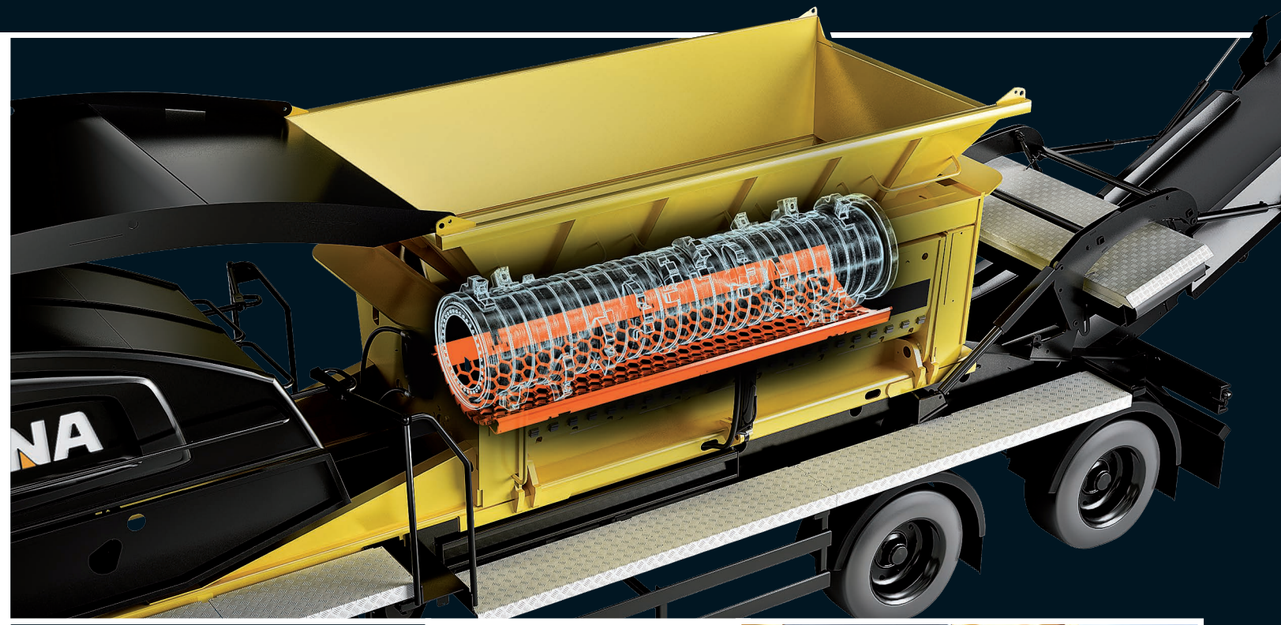

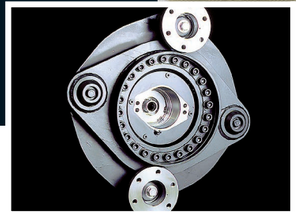

Rotor carrier assembly, swing frame (pat.) protecting the gears

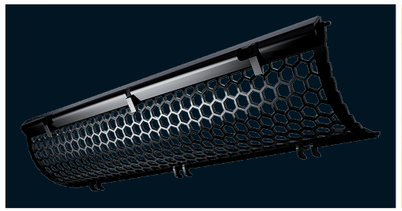

Screens with a variety of mesh sizes to adjust particle size

Hardface weld surfacing to extend the life of the rotor

Bolt-on, reversible cutting knives

TCS with 12 pre-programmed material settings, connected with TANA ProTrack®

TANA ProTrack® reports to your device and a real-time view of the machine for troubleshooting and quick maintenance

Easy Power Pack Access

Drop-in counter-knives

The number of counter-knives play an essential role in determining the capacity of the shredder and the particle size of the end product. TANA Shark's counter-knives have two wear surfaces. They are quick and easy to remove and turn because of the drop-in attachment mechanism. Full counter-knives and half counter-knives can be interchanged to maximize throughput.

Adjustable plug-in rotor screens

Another factor affecting the end-product size is the rotor screen. A variety of rotor screens with different mesh sizes are available for the TANA Shark. The rotor screens are easy to install and remove while on the job-site because of the "plug-in" design. The TANA Shark's screen is adjustable allowing the screen clearance to be fine-tuned for maximum performance while reducing the possibility of screen clogging.

Reversing rotor

The reversing function assists in enabling uninterrupted flow of the material through the shredder. Material that gets wrapped around other shredder's rotors is removed during Tana's reversing feature.

Serviceability is key to productivity

The ease of service and maintenance of a shredder in harsh and dirty operating conditions is one of the most important key factors. The TANA Shark addresses these issues by having the diesel engine, radiators, coolers, and filter sets fitted in service-friendly locations. Scheduled maintenance is a snap since the engine bay hood opens to both sides of the machine. Daily service is greatly reduced by pre-screening the airflow to the radiators and an oversized engine air filter.

The hydraulic controlled sidewall opens for easy access to the rotor, the rotor knives, and the counter-knives while acting as the service platform.

The attachment mechanisms of the cutting tools are simple. Changing all the cutting tools on the rotor is easy and quick using high strength fasteners. Replacing counter-knives is as simple as pushing the knives and locking mechanisms out by hand and dropping the new ones in place.

Fire safety is another key issue when operating in dry and dusty conditions. The low-speed rotor of the TANA Shark minimizes sparks and the bolt-on wear parts make welding work unnecessary in on-site conditions.

Designed to be simple and strong

The simplicity of the TANA Shark's structure allows the removal and reinstallation of any component without the need for major disassembly. For example, the conveyor may be quickly uncoupled and removed as a complete unit. The framework materials are high-quality steel for easier welding and maintenance. All wear parts are made of durable hardened steel.

TANA ProTrack® – State of the art information management system

TANA ProTrack®

An Internet based wireless connection to the shredders control system minimizes downtime by enabling immediate troubleshooting and technical support.

Maximum uptime

- Remote access for quicker and more accurate troubleshooting by the distributor and TANA technical support
- Critical alarm notifications to several receivers by e-mail
- Reminders for scheduled maintenance to several receivers by e-mail Accuracy to cost follow-up through TANA Protrack® reports (additional option)
- Monthly operational reports to given e-mails on e.g. working hours, power consumption, work load…

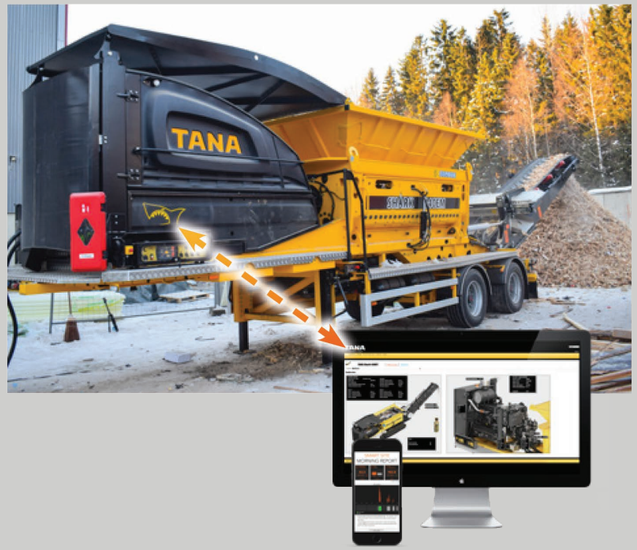

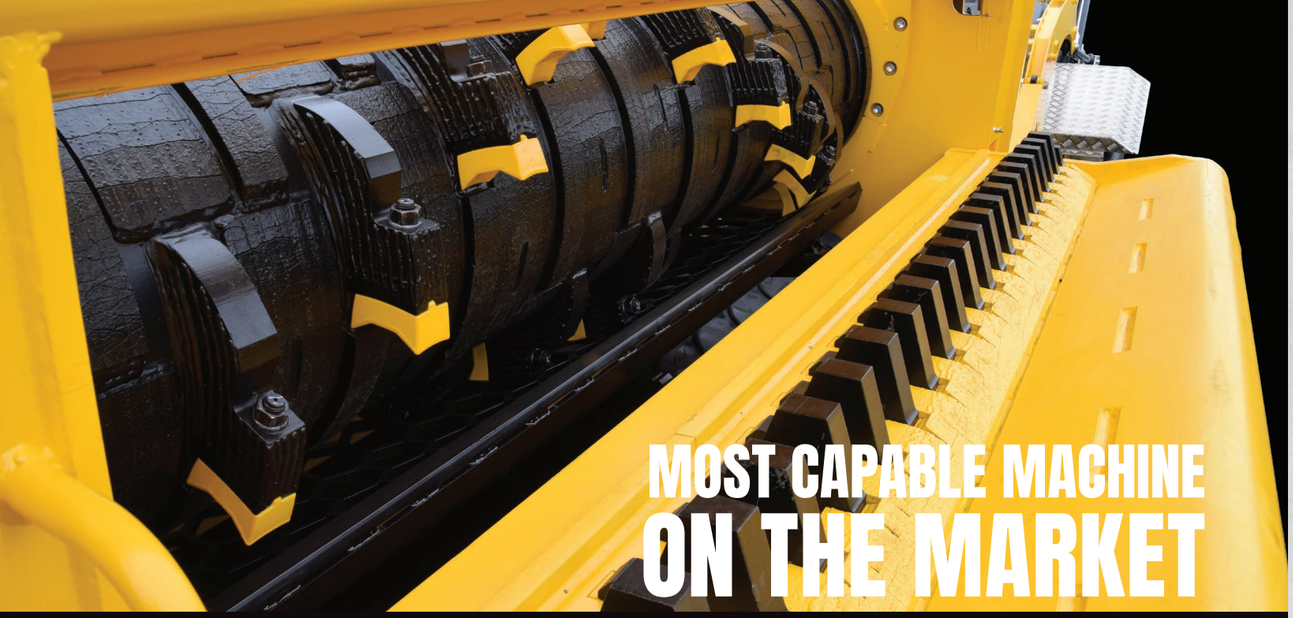

MOST CAPABLE MACHINE ON THE MARKET

C & D

Dimensional Lumber

Ragger Tail

Green Waste

Tires

Mulch & Compost

Railroad Ties

And More...

Unique Versatility

Capable of 2" Minus

CUSTOMER BENEFITS

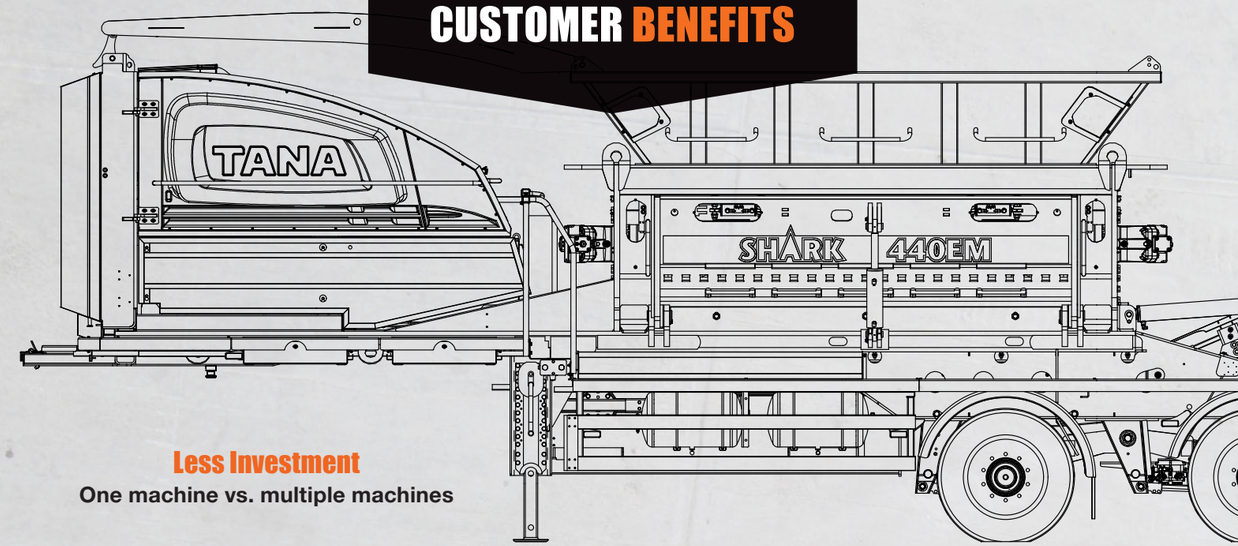

Less Investment

One machine vs. multiple machines

Increased Flexibility

Change screens in less than 1 hour

Optimized end product size and capacity

Purpose-built rotor, counter-knife sidewall design and rotor screen sizing options

High level of uptime

Quick change of rotors, knives and counter-knives
Easily remove obstructions with sidewall opening capability

Hydrolic door for easy rotor access

Quick access to maintain hopper and counter knives to increase productivity

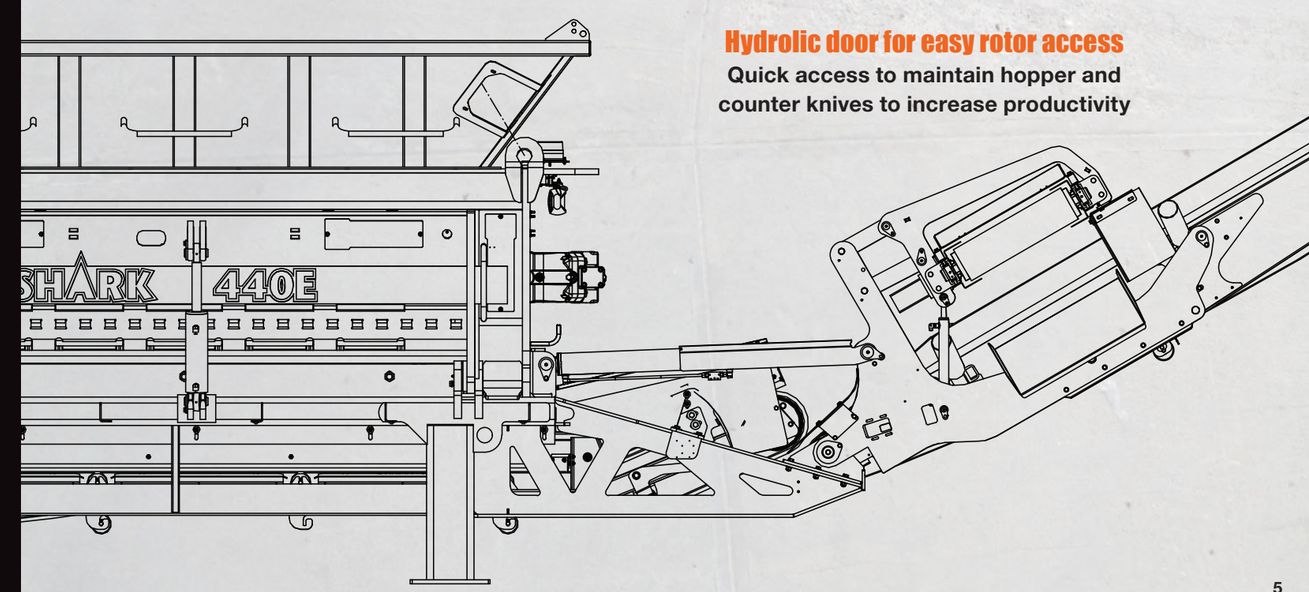

DIESEL

General Information	220D	220DT	440D	440DT
Operating Weight	53,2000 lbs	56,750 lbs	59,775 lbs	63,545 lbs
Total transport length	415 in	415 in	415 in	415 in
Total operation length	622 in	620 in	622 in	620 in
Total width	99 in	113 in	99 in	113 in
Total transport height	150 in	132 in	150 in	132 in
Engine	Cummins QSX15 - 580 HP Fullfills U.S. EPA Tier 4 Final, CARB Tier 4 Final and EU Stage IV			
Rotor drive gears	Lohmann and Stolterfogt			
Nominal rotor torque	81,132 ft-lbs x 2 total 162,260 ft-lbs		162,260 ft-lbs total 324,530 ft-lbs	

Shredding tools	220D	220DT	440D	440DT
Rotor Shredding length	118 in			
Rotor speed	Maximum 30 rpm			
Rotor diameter	36 in			
Rotor knives	22 pcs		33 pcs	
Counter knives	23 pcs			

ELECTRIC

General Information	440E	440E w/conveyor	440EM
Operating Weight	45,000 lbs	54,000 lbs	62,800 lbs
Total transport length	227 in	250 in	395 in
Total operation length	227 in	469 in	609 in
Total width	90 in	95 in	100 in
Total transport height	117 in	132 in	152 in
Engine	Powered by electric motors (400V/50Hz) (2 x 160 kW) (US 480V / 60Hz, 2x175 kW)		
Rotor drive gears	2 x 162,260 ft-lbs		
Nominal rotor torque	324,530 ft-lbs		440 kNm
Supply voltage	480 V / 60 Hz		480 V / 60 Hz
Rated current	630A		630A

Shredding tools	440E	440EM
Rotor Shredding length	118 in	
Rotor speed	Maximum 26 rpm	
Rotor diameter	36 in	
Rotor knives	33 pcs	
Counter knives	23 pcs	

DIESEL ADVANTAGES

Designed to operate in remote locations

Many locations where material needs to be processed is at a location where you need the freedom a Diesel machine offers.

Track Unit mobile on site

Tracks allow for the operator to easily move from waste stream to waste stream on a jobsite in a time efficient manner.

Optimal if traveling with machine

Whether you have multiple locations where you need to process material or if you plan to take your machine to your customers, a diesel unit is optimal for you.

ELECTRIC ADVANTAGES

Less noise & zero emissions with electricity

Noise is an environmental hazard and a work safety issue. The electric TANA Shark is considerably quieter than a diesel-powered shredder, making it easier to follow noise and safety regulations.

Lower operational costs

A machine that runs on electricity goes easy on both the environment and the wallet. The initial investment will pay itself back in lower operating costs while supporting sustainable development, cleaner site and safer working environment through zero emissions.

Next generation control system

The electric TANA Shark 440 models come with the next generation of TANA Control System (TCS). The highly user-friendly, color touch screen control system allows intuitive operation of the machine and reduces the hours spent on user training.

KEY FEATURES ON EVERY TANA SHREDDER

TANA ProTrack®

An Internet based wireless connection to the shredder's control system minimizes downtime by enabling immediate troubleshooting and technical support. As an option you can also get operational reports via email to optimize your process.

Auto Reversible Rotor

The Tana shark shredders are designed with a system that automatically reverses the rotor to both increase output as well as prevent the machine from damaging itself no matter what material ends up in the hopper. This allows for an operator to feed the machine without fear of damaging the machine and creating downtime.

HUMDINGER EQUIPMENT®

DESIGNED TO IMPROVE YOUR BOTTOM LINE

Humdinger Equipment, Ltd.

3202 Clovis Road | Lubbock, Texas 79415

TELEPHONE 806.771.9944 **FAX** 806.771.9945

EMAIL sales@humdingerequipment.com

TANA North America

From Waste to Value®

Revised print Jan 2019

www.humdingerequipment.com

GET A HUMDINGER!

H620 PULL SCRAPER

Made in the USA

WITH OVER 90 YEARS OF COMBINED EXPERIENCE in engineering, manufacturing, and sales of elevating and pull scrapers, Humdinger Equipment, LTD., is proud to introduce the H620 Pull Scraper. The engineers that first introduced you to construction grade pull scrapers with Noble 417, Humdinger H619, and Humdinger H619G are committed to providing the best earth moving products in the market. Our engineers designed and manufactured the 613, 615, and 623 elevating scrapers for Caterpillar for over 20 years and continue to design the most sought after scrapers in the world. It is our engineering experience and commitment to excellence that allows Humdinger to develop and produce the best products on the market today.

HUMDINGER

HUMDINGER EQUIPMENT LTD.

Humdinger Equipment
3202 Clovis Road
Lubbock, TX 79415

P: 888-999-4909
P: 806-771-9944
F: 806-771-9945

H620 FEATURES

- 20.5 Cubic Yard Rated Capacity
- 130 Inches Cut Width
- 12 Inch Depth of Cut
- 143 Inch Trasport Width
- 29.5 x 29 Standard Tires
- Tall Ejector Prevents Carry Over
- Abrasion Resistant AR Steel Floor
- Pushable Rear Frame and Bumper
- Adjustable Reversable Cuting Edges
- 6 or 8 Inch Hitch Ball Designs
- Hydraulic Lines Routed for Long Life
- Efficient Cellular Structural Design
- Plated Fasteners, Pins and Hydraulic Components
- Brake Option
- Depth Gauge
- AWS D1.1 Certified Welders
- Made in the USA
- Other Options Available

DESIGNED BY SCRAPER PEOPLE FOR SCRAPER PEOPLE. IT'S ABOUT TIME.

We have over 90 years of combined scraper design and manufacturing experience.

All of our equipment is proudly made in the USA.

For more information about any of our equipment, call us toll-free at 888-999-4909 or visit us online at humdingerequipment.com.

GET A HUMDINGER!

H626 PULL SCRAPER

Made in the USA

WITH OVER 100 YEARS OF COMBINED EXPERIENCE in engineering, manufacturing, and sales of elevating and pull scrapers, Humdinger Equipment, LTD., is proud to introduce the H626 Pull Scraper. The engineers that first introduced you to construction grade pull scrapers with Noble 417, Humdinger H619, Humdinger H619G and H620 are committed to providing the best earth moving products in the market. Our engineers designed and manufactured the 613, 615, and 623 elevating scrapers for Caterpillar for over 20 years and continue to design the most sought after scrapers in the world. It is our engineering experience and commitment to excellence that allows Humdinger to develop and produce the best products on the market today.

HUMDINGER EQUIPMENT™

DESIGNED TO IMPROVE YOUR BOTTOM LINE

Humdinger Equipment
3202 Clovis Road
Lubbock, TX 79415

P: 888-999-4909
P: 806-771-9944

www.humdingerequipment.com

H626 FEATURES

- 26 Cubic Yard Rated Capacity
- Highest Ejector Speed in Market – 30% Faster than H620
- 70 Inch Throat for Ejection
- 149 Inches Cut Width
- 12 Inch Depth of Cut
- 162 Inch Transport Width
- 404 Inch Transport Length
- 118 Inch Transport Height
- 875/65R29 Standard Tires
- Tall Ejector Prevents Carry Over
- Abrasion Resistant AR Steel Floor, Bowlsides, and Ejector Face
- Heavy Duty Pushable Rear Frame and Bumper
- Adjustable Reversible Cutting Edges
- 6 or 8 Inch Hitch Ball Designs
- Laser Ready
- Vented Axle for Service Ease
- Hydraulic Lines Routed for Long Life
- Efficient Cellular Structural Design
- Plated Fasteners, Pins and Hydraulic Components
- Brake Option
- Depth Gauge
- AWS D1.1 Certified Welders
- Made in the USA
- Other Options Available

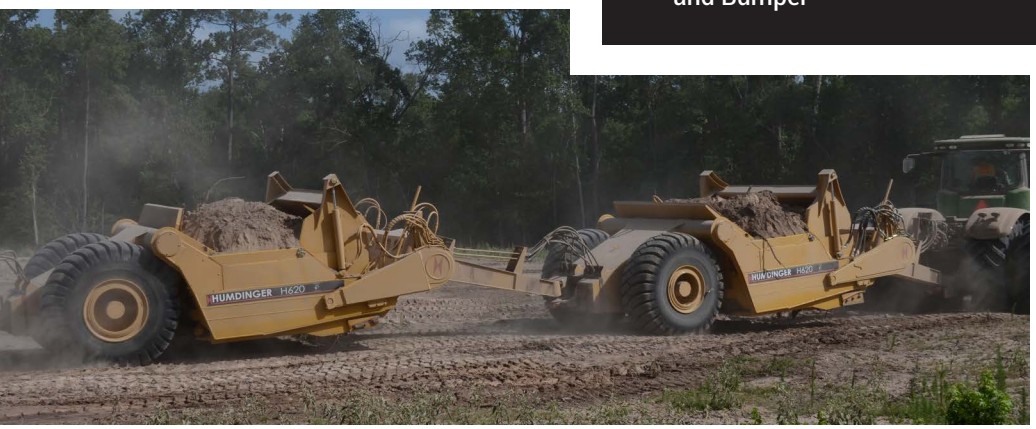

DESIGNED BY SCRAPER PEOPLE FOR SCRAPER PEOPLE. IT'S ABOUT TIME.

We have over 100 years of combined scraper design and manufacturing experience.

All of our equipment is proudly made in the USA.

For more information about any of our equipment, call us toll-free at 888-999-4909 or visit us online at humdingerequipment.com.

Humdinger Earth Moving / Scraper Upgrade & Downgrade Specifications

The Humdinger line of construction grade scrapers has been developed to provide superior performance in all applications. Borrowing from technology and experience of the Humdinger 620 product line, the Humdinger 18 yard carry all scraper, the Humdinger 25 & 26 yard ejector scrapers, and the 34 yard ejector scraper is the standard for all others. Humdinger offers our drum line for material separation needs.

Specification Changes:

H618C - Downgrade

- **18 cubic yard heaped capacity**
- **Ideal product for land levelling**
- **Perfectly sized cylinder that optimize force and speed of cutting edge during loaded**
- **Bucket has both straight and dropped edge configurations**
- **Reinforced bucket cutting edge for use in tough soils and rock**
- **Abrasion Resistant Bucket**
- **4 Wheel design**
- **150 Inch Cutting Width**
- **Top Load Capable**
- **Largest Top Load Target on the market**
- **Single, Tandem, or Triple Configurations**
- **Laser/GPS Ready**
- **20.5 x 25 Tires Standard**
- **Optional Brakes**
- **Plated Fasteners, Pins and Hydraulic Components**
- **22,000 lbs**
- **AWS D1.1 Certified Welders**
- **Made in the USA**

H625 - Upgrade

- **25 cubic yard heaped capacity**
- **Perfectly sized cylinder that optimize force and speed of cutting edge during loaded**
- **Abrasion Resistant Bowl**
- **150 Inch Cutting Width**
- **Top Load Capable**
- **Largest Top Load Target on the market**
- **Single, Tandem, or Triple Configurations**
- **Laser/GPS Ready**

- **Two wheel configuration with 33.25 x 25 tires standard**
- **Optional Brakes**
- **Plated Fasteners, Pins and Hydraulic Components**
- **31,500 lbs**
- **AWS D1.1 Certified Welders**
- **Made in the USA**

H626 - Upgrade

- **26 cubic yard heaped capacity**
- **Perfectly sized cylinder that optimize force and speed of cutting edge during loaded**
- **Abrasion Resistant Bowl**
- **150 Inch Cutting Width**
- **Top Load Capable**
- **Largest Top Load Target on the market**
- **Single, Tandem, or Triple Configurations**
- **Laser/GPS Ready**
- **Two wheel configuration with 33.25 x 25 tires standard**
- **Optional Brakes**
- **Plated Fasteners, Pins and Hydraulic Components**
- **32,500 lbs**
- **AWS D1.1 Certified Welders**
- **Made in the USA**

H634 - Upgrade

- **34 cubic yard heaped capacity**
- **Perfectly sized cylinder that optimize force and speed of cutting edge during loaded**
- **Abrasion Resistant Bowl**
- **156 Inch Cutting Width**
- **Top Load Capable**
- **Largest Top Load Target on the market**
- **Single, Tandem, or Triple Configurations**
- **Laser/GPS Ready**
- **Two wheel configuration with 37.25 x 35 tires standard**
- **Optional Brakes**
- **Plated Fasteners, Pins and Hydraulic Components**
- **37,500 lbs**
- **AWS D1.1 Certified Welders**
- **Made in the USA**

Drum Seperation

- **7 ft OD 20 ft Length on wheels or tracks**
- **8 ft OD 16 ft Length on wheels or tracks**

NEW FOR 2014 MODELS

- Aggressive / Finishing Chain Combo Standard Configuration
  - Aggressive Chains – Front and Mid Sections
  - Finishing Chains – Rear Sections
- "Zero Bounce" Tires – Eliminates Excessive Bouncing
- All Joints are lubricated – Auto Lube Installable

NEW ENGAGEMENT TOOLS:

- **DOG-LEG CHAIN** – The patented Dog Leg Harrow technology fills a gap between the conventional spike chain or rolling basket, and more complex multi-stage agricultural machinery that incorporates residue control. It offers a greater capability than conventional machinery for dealing with crop residues and soil leveling in broad acre applications.
- **AGGRESSIVE HEAVY BOLT-ON DISK** – The patented "Hook & Eye" Disk Chain offers an option for those looking for a heavy more aggressive engagement tool than our standard Aggressive/Finishing Chain combo. This engagement tool provides a more aggressive contoured disk with bolt-on disk to a forged housing. This allows the farmer to only need to replace the disk while getting a life 4 to 5 times longer from the housing.

heavy casted bolt-on disc

dog-leg chain

aggresive bolt-on disc option

bolt-on disc options

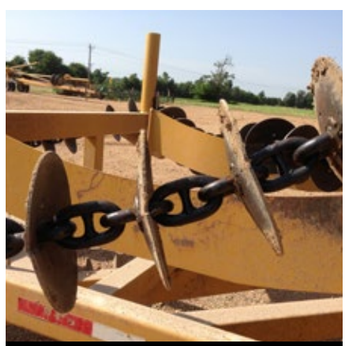
finishing chain

Chain Options	Kilograms per Meter	Pounds per Foot
HEQ Finishing Chain	34	23
HEQ Aggresive	67	45
HEQ Heavy Casted Bolt-On Disc	72	49
HEQ Dog-Leg	43	29
Competition		
Kelly Heavy Aggressive	70	47
Kelly Standard Chain	50	33

HUMDINGER

Humdinger Equipment
3202 Clovis Road
Lubbock, TX 79415

P: 888-999-4909
P: 806-771-9944
F: 806-771-9945

quick vertical and horizontal chain adjusting system

455 CDH FEATURES

- Early and cost effective management of stubble
- Cost effective seedbed preparation
- Shallow tillage
- Stimulate germination of weed seeds prior to pre planting knock down herbicide application
- Level wheel ruts and rough fields in the spring
- Early access to fields to start crop preparation. Dry out the surface and expose dark soil to the sunlight for soil temperature management pre planting
- Dry out rice stubble quickly for a complete burn in the fall
- Mulch corn stubble in the fall to return organic matter and nutrients to the soil as valuable humus
- Ideal for planting small grains like pasture seeds, canola and wheat to optimize crop potential
- Effective herbicide, manure, and fertilizer incorporation

spare tire and heavy duty jack

455 CDH ADVANTAGES

- Universal front end allows attachment to any tractor
- Rear single tire 16.5 X 16.1 14-Ply eliminates material packing that occurs with a 2-tire configuration
- ASABE / SAE / ANSI S279.14 Compliant lighting system
- Linear horizontal & vertical chain adjuster for tension and height
- Hydraulic operation 100% functional from tractor cab
- 3-Circuit hydraulic system
- Tire & chain adjustment tools
- No assembly required
- Made in the U.S.A.

dog-leg fluffing straw

universal drawbar system

PRODUCT INFORMATION & WARRANTY

- Construction grade designed & manufactured
- Spare tire included
- Tool box installed on unit
- 12-Month warranty on structures & parts
- 2-Year warranty on discs & chain

100% Tire Coverage

v-hanger

single rear wheel system

fixed rear end with separate height adjusters

HUMDINGER

HUMDINGER EQUIPMENT LTD.

FLEXIBLE SOLUTIONS FOR YOUR FARMING NEEDS

TANA E SERIES LANDFILL COMPACTOR STANDARD AND EXTENDED WARRANTY TERMS

TANA _____ S/N _____ WARRANTIED HOURS _____OR WARRANTIED _____ YEARS

Tana North America, Ltd (Tana) hereby warrants that the Tana E Series compactor, manufactured by the company, is free from defects in terms of raw materials and workmanship. This warranty does not cover those parts of the Tana machines which are directly warranted to the owner of the machine or to the distributor of Tana. The extended warranty period is either the number of years stated above or the number of hours operated, whichever occurs first. Standard warranty is for one (1) year or two-thousand (2,000) hours. The warranty is valid for the first owner (hereafter the Customer) of the machine only. The warranty period starts from the date of start-up inspection at the first end user. Any liability whatsoever to any party other than the first end user is expressly disclaimed. The warranty is only valid for those machines for which the SMART SITE™ order form, the Delivery Inspection & Commissioning Report and the Warranty Service Report at the initial 50 operating hours' service have been duly filled in and returned to Tana, within 14 days from the events. The warranty period of the parts changed during the warranty period of the machine shall finish at the end of the warranty period of the machine itself.

If a fault in (a) raw material(s) or workmanship is detected during the warranty period, Tana shall:

- At its absolute discretion, either provide a new or a fully reconditioned replacement part or repair the defective part to correct the fault;
- Pay customary freight expenses to the address of the authorized representative; excluding custom or other tax-like charges.
- Replace the oil, filters, coolant liquid and other consumables which have become unserviceable as a result of the fault;
- Pay reasonable costs of labor required for dismantling and fitting of the replacement part during normal working hours.
- Parts, labor, and travel during normal business days and hours will be paid for repairs included in the plan.

The Customer shall be responsible for:

- The transport and transfer costs of the machine designated work area;
- Any other costs not mentioned in the Tana responsibilities.
- The payment of all local taxes;
- The immediate notification of such fault covered by the warranty.
- Using authorized Tana service company to carry out scheduled maintenance during the warranty period according to the Scheduled Servicing as stated by the Tana Compactor Maintenance Manual. All costs associated with scheduled maintenance are to be paid by the Customer.
- Using oils approved by Tana, original spare parts and service filters provided by Tana;
- Valid TANA SMART SITE™ system, including connection, during the whole warranty period;
- Consumables, preventative maintenance kits, oils, filters, coolant, grease, fuel, DEF Fluid, anti-freeze, drum fluids, batteries, lights, glass, all hoses, all belts, all rubber components, debris guard covers, wiper blades, steering bumpers, fuses, etc.
- Wear items, including, but not limited to, drum cone, drum teeth, drum scraper bars, drums scraper bar parts, wire cutters, belts, cylinder seal kits, etc.
- Completing daily and routine maintenance as describe in the operations and service manuals of Tana and Cummins Extended warranty coverage. Documentation for daily and routine maintenance must be maintained and provided to Tana within thirty (30) days of the service.

Tana cannot and shall not be held liable for faults, which have resulted from:

- Improper use of the machine, negligence and/or incorrect repair work undertaken by the Customer;
- Natural wear, corrosion or contamination;
- Impact of foreign objects, vandalism or fire;
- Damage caused by debris, abuse, neglect of service, or neglect of alarms
- Failure to observe the operating, maintenance and special instructions.
- Failure of customer to properly clean cooling system.
- Parts, which can be repaired or corrected with minimum action such as changing seals, tightening or adjustment etc.
- Any parts or components manufactured or supplied by third parties or damage caused by such parts or components to the compactor.
- Alarms not being cured while operating the unit, including, but not limited to temperature alarms, low fluid alarms, low pressure alarms, etc.
- Damage and wear caused by off trash transportation of unit. If unit is transferred to and from a workshop area, it must be on a soft road that allows a minimum of two (2) inch of tooth penetration.

Additional Extended Warranty Terms

- Tana will pay for all parts and labor needed to repair the damage to the engine resulting from a Covered Failure.
- When it is necessary for mechanics to make on-site Warranty repairs, Tana will pay reasonable travel expenses to travel to and from the site of failure.
- There will be no deductible for the extended coverage.
- Tana will not be responsible for failures caused by incorrect oil, fuel, diesel exhaust fluids or by water, dirt, or other contaminants in the fuel, oil or diesel exhaust fluid.
- Owner is responsible for the costs to investigate complaints, unless the complaint is determined to be due to a Covered Failure.
- Engines with an emissions certification of EPA Tier 4 Interim / Final must be operated using only diesel fuel having no more than the corresponding maximum sulfur content. Failure to use the specified fuel as listed in the Cummins Fuel Bulletin #3379001 Table 1 (Cummins Inc. Required Diesel Fuel Specifications) can damage engine and aftertreatment system within a short period of time. This damage could cause the engine to become inoperable and failures attributable to the use of incorrect fluids will be denied warranty coverage. Fuel specifications also need to comply with local fuel regulations (ASTM D975 for North America) for warranty eligibility.
- Tana is not responsible for failures resulting from unauthorized modifications or alterations to the Engine or adjustments that substantially alter the Engine's operating characteristics. Failures, other than those resulting from defects in material or factory workmanship, are not covered by this Plan.
- Tana is not responsible for failures or damage resulting from what Tana determines to be abuse or neglect, including, but not limited to: operation without adequate coolants or lubricants; over-fueling; over-speeding; lack of maintenance of cooling, lubricating or intake systems; improper storage, starting, warmup, run-in or shutdown practices; unauthorized modifications to the Engine.
- Tana is also not responsible for failures caused by incorrect oil, fuel or diesel exhaust fluid or by water, dirt or other contaminants in the fuel, oil or diesel exhaust fluid.
- This Plan does not apply to belts, hoses or accessories supplied by Cummins which bear the name of another company. This category includes, but is not limited to: alternators, starters, fans, air conditioning compressors, clutches, filters, transmissions, torque converters, steering pumps, non-Cummins fan drives, Engine compression brakes and air compressors.
- Coverage under this Plan expires after the first three years on Cummins accessories or maintenance components including, but not limited to: fuel injectors, injection and fuel pumps, STC hydraulic tappets, STC oil control valves, turbochargers, air compressors, fan clutches, water pumps, fan hubs, fan idler pulley assemblies, belt tensioners and vibration dampers. These components are considered to be maintenance items after three years.
- Cummins branded starters and alternators have Coverage for the first two years or 2,000 hours, whichever occurs first, regardless of the Engine family.
- Aftertreatment component failures are not covered by this Plan.
- Parts used to repair a Covered Failure may be new Cummins parts, Cummins approved rebuilt parts or repaired parts. Tana is not responsible for failures resulting from the use of parts not supplied by Cummins.
- A new Cummins or Cummins approved rebuilt part used to repair a Covered Failure assumes the identity of the part it replaced and is entitled to the remaining Coverage hereunder.
- Blowby is not covered under this Plan.
- Tana does not cover wear or wearout of covered parts.
- Tana is not responsible for incidental or consequential damages.
- Hydrostatic pumps, motors, and gearboxes are only available on extended warranty plans up to 10,000 hours.
- Except for the applicable standard warranty, the warranty set forth herein is the sole warranty made by Cummins in regard to the engine. Tana makes no other warranties, express or implied, or of merchantability or fitness for a particular purpose.
- Oil samples are required every 500 hours for engine oil, hydraulic oil, and gear oil on units under extended warranty plans or total maintenance and repair contracts.

The warranty claim must be submitted in writing. It shall be drawn up by the authorized local representative of Tana, and must be forwarded to Tana no later than 14 days from the correction of the fault or repair. Tana is not obliged to process warranty claims submitted later than the said 14 days. By doing this, the party otherwise entitled to compensation shall waive its right to appeal to the warranty, due to demonstrated passivity. All faulty and damaged parts shall be kept for six (6) months by the customer or distributor. The parts shall be delivered to Tana on request, carriage prepaid. The carriage for any parts returned on Tana request shall be reimbursed in the case of a warrantable failure. These terms of warranty replace all previous explicit or other commercial warranties based on established practices including any guarantees for machine applicability for (a) special purpose(s). The compensation on the basis of this warranty is limited to only the cost of materials, as specified herein. Tana is not responsible for any consequential damages or losses.

Customer name:_____ Date:_____ Customer email:_____

Customer phone:_____ Signature:_____

Revision 07012018

TANA North America

From Waste to Value

TANA SHARK SHREDDER STANDARD AND EXTENDED WARRANTY TERMS

TANA _____ S/N _____ WARRANTIED HOURS _____OR WARRANTIED _____ YEARS

Tana North America, Ltd (Tana) hereby warrants that the Tana Shark waste shredders, manufactured by the company, is free from defects in terms of raw materials and workmanship. This warranty does not cover those parts of the Tana machines which are directly warranted to the owner of the machine or to the distributor of Tana. The extended warranty period is either the number of years stated above or the number of hours operated, whichever occurs first. Standard warranty is for one (1) year or fifteen hundred (1,500) hours. The warranty is valid for the first owner (hereafter the Customer) of the machine only. The warranty period starts from the date of start-up inspection at the first end user. Any liability whatsoever to any party other than the first end user is expressly disclaimed. The warranty is only valid for those machines for which the SMART SITE™ order form, the Delivery Inspection & Commissioning Report and the Warranty Service Report at the initial 50 operating hours' service have been duly filled in and returned to Tana, within 14 days from the events. The warranty period of the parts changed during the warranty period of the machine shall finish at the end of the warranty period of the machine itself.

If a fault in (a) raw material(s) or workmanship is detected during the warranty period, Tana shall:

- At its absolute discretion, either provide a new or a fully reconditioned replacement part or repair the defective part to correct the fault;
- Pay customary freight expenses to the address of the authorized representative; excluding custom or other tax-like charges.
- Replace the oil, filters, coolant liquid and other consumables which have become unserviceable as a result of the fault;
- Pay reasonable costs of labor required for dismantling and fitting of the replacement part during normal working hours.
- Parts, labor, and travel during normal business days and hours will be paid for repairs included in the plan.

The Customer shall be responsible for:

- The transport and transfer costs of the machine designated work area;
- Any other costs not mentioned in the Tana responsibilities.
- The payment of all local taxes;
- The immediate notification of such fault covered by the warranty.
- Using authorized Tana service company to carry out scheduled maintenance during the warranty period according to the Scheduled Servicing as stated by the Tana Shark Maintenance Manual. All costs associated with scheduled maintenance are to be paid by the Customer.
- Maintenance of the cutting knives as described by the Operators' Manual and Maintenance Manual.
- Using oils approved by Tana, original spare parts and service filters provided by Tana;
- Valid TANA SMART SITE™ system, including connection, during the whole warranty period;
- Consumables, preventative maintenance kits, oils, filters, coolant, grease, fuel, DEF Fluid, anti-freeze, drum fluids, batteries, lights, glass, all hoses, all belts, rubber components, debris guard covers, wiper blades, steering bumpers, fuses, etc.
- Wear items, including, but not limited to, rotor knives; rotor bolts, washers, and nuts; rotor brackets; rotor saddles; hard surfacing; counter knives; wear plates; conveyor components, magnet components; belts; cylinder seal kits; etc.
- Completing daily and routine maintenance as describe in the operations and service manuals of Tana and Cummins Extended warranty coverage. Documentation for daily and routine maintenance must be maintained and provided to Tana within thirty (30) days of the service.

Tana cannot and shall not be held liable for faults, which have resulted from:

- Improper use of the machine, negligence and/or incorrect repair work undertaken by the Customer;
- Natural wear, corrosion or contamination;
- Faults that have resulted from overheating or freezing;
- Impact of foreign objects, vandalism or fire;
- Damage caused by debris, abuse, neglect of service, or neglect of alarms
- Failure to observe the operating, maintenance and special instructions.
- Failure of customer to properly clean cooling system.
- Parts, which can be repaired or corrected with minimum action such as changing seals, tightening or adjustment etc.
- Alarms not being cured while operating the unit, including, but not limited to temperature alarms, low fluid alarms, low pressure alarms, etc.
- Any parts or components manufactured or supplied by third parties or damage caused by such parts or components to the compactor.

Additional Extended Warranty Terms

- Tana will pay for all parts and labor needed to repair the damage to the engine resulting from a Covered Failure.
- When it is necessary for mechanics to make on-site Warranty repairs, Tana will pay reasonable travel expenses to travel to and from the site of failure.
- There will be no deductible for the extended coverage.
- Tana will not be responsible for failures caused by incorrect oil, fuel, diesel exhaust fluids or by water, dirt, or other contaminants in the fuel, oil or diesel exhaust fluid.
- Owner is responsible for the costs to investigate complaints, unless the complaint is determined to be due to a Covered Failure.
- Engines with an emissions certification of EPA Tier 4 Interim / Final must be operated using only diesel fuel having no more than the corresponding maximum sulfur content. Failure to use the specified fuel as listed in the Cummins Fuel Bulletin #3379001 Table 1 (Cummins Inc. Required Diesel Fuel Specifications) can damage engine and aftertreatment system within a short period of time. This damage could cause the engine to become inoperable and failures attributable to the use of incorrect fluids will be denied warranty coverage. Fuel specifications also need to comply with local fuel regulations (ASTM D975 for North America) for warranty eligibility.
- Tana is not responsible for failures resulting from unauthorized modifications or alterations to the Engine or adjustments that substantially alter the Engine's operating characteristics. Failures, other than those resulting from defects in material or factory workmanship, are not covered by this Plan.
- Tana is not responsible for failures or damage resulting from what Tana determines to be abuse or neglect, including, but not limited to: operation without adequate coolants or lubricants; over-fueling; over-speeding; lack of maintenance of cooling, lubricating or intake systems; improper storage, starting, warmup, run-in or shutdown practices; unauthorized modifications to the Engine.
- Tana is also not responsible for failures caused by incorrect oil, fuel or diesel exhaust fluid or by water, dirt or other contaminants in the fuel, oil or diesel exhaust fluid.
- This Plan does not apply to belts, hoses or accessories supplied by Cummins which bear the name of another company. This category includes, but is not limited to: alternators, starters, fans, air conditioning compressors, clutches, filters, transmissions, torque converters, steering pumps, non-Cummins fan drives, Engine compression brakes and air compressors.
- Coverage under this Plan expires after the first three years on Cummins accessories or maintenance components including, but not limited to: fuel injectors, injection and fuel pumps, STC hydraulic tappets, STC oil control valves, turbochargers, air compressors, fan clutches, water pumps, fan hubs, fan idler pulley assemblies, belt tensioners and vibration dampers. These components are considered to be maintenance items after three years.
- Cummins branded starters and alternators have Coverage for the first two years or 2,000 hours, whichever occurs first, regardless of the Engine family.
- Aftertreatment component failures are not covered by this Plan.
- Parts used to repair a Covered Failure may be new Cummins parts, Cummins approved rebuilt parts or repaired parts. Tana is not responsible for failures resulting from the use of parts not supplied by Cummins.
- A new Cummins or Cummins approved rebuilt part used to repair a Covered Failure assumes the identity of the part it replaced and is entitled to the remaining Coverage hereunder.
- Blowby is not covered under this Plan.
- TANA DOES NOT COVER WEAR OR WEAROUT OF COVERED PARTS.
- TANA IS NOT RESPONSIBLE FOR INCIDENTAL OR CONSEQUENTIAL DAMAGES.
- Hydrostatic pumps, motors, and gearboxes are only available on extended warranty plans up to 10,000 hours.
- EXCEPT FOR THE APPLICABLE STANDARD WARRANTY, THE WARRANTY SET FORTH HEREIN IS THE SOLE WARRANTY MADE BY TANA IN REGARD TO THE ENGINE. TANA MAKES NO OTHER WARRANTIES, EXPRESS OR IMPLIED, OR OF MERCHANTABILITY OR FITNESS FOR A PARTICULAR PURPOSE.

The warranty claim must be submitted in writing. It shall be drawn up by the authorized local representative of Tana, and must be forwarded to Tana no later than 14 days from the correction of the fault or repair. Tana is not obliged to process warranty claims submitted later than the said 14 days. By doing this, the party otherwise entitled to compensation shall waive its right to appeal to the warranty, due to demonstrated passivity. All faulty and damaged parts shall be kept for six (6) months by the customer or distributor. The parts shall be delivered to Tana on request, carriage prepaid. The carriage for any parts returned on Tana request shall be reimbursed in the case of a warrantable failure.

These terms of warranty replace all previous explicit or other commercial warranties based on established practices including any guarantees for machine applicability for (a) special purpose(s). The compensation on the basis of this warranty is limited to only the cost of materials, as specified herein. Tana is not responsible for any consequential damages or losses.

Customer name:_____ Date:_____

Customer email:_____ Customer phone:_____

Signature:_____ Revision 6-1-2017

TANA North America

From Waste to Value

HUMDINGER

HUMDINGER EQUIPMENT LTD.

TANA North America

From Waste to Value

HUMDINGER PRODUCT **LIMITED WARRANTY**

Product: _____ Model: _____ Warranty Period: _____ or Hours: _____

WARRANTY PERIOD

Humdinger Equipment, Ltd warrants that each new PRODUCT to be manufactured free from defects in material and workmanship for a period stated above or hours above, whichever occurs first, from the date of shipment to the original customer.

CLAIMS SUBMISSION

Claims are required to be submitted in accordance with instructions contained in and the forms indicated by the WARRANTY PROCEDURE document. Claims must be submitted within 45 days of occurrence or will not be processed.

HUMDINGER EQUIPMENT, LTD. RESPONSIBILITIES

If a defect in material or workmanship is identified during the Warranty Period, Humdinger Equipment, Ltd. will, during normal working hours and through a place of business designated to be a Humdinger Equipment, Ltd. authorized repair facility:

- Provide at Humdinger Equipment, Ltd. discretion, new, remanufactured or Humdinger Equipment, Ltd. approved repair parts or assembled components as needed to correct the defect.
  Note: Items replaced under this warranty become the property of Humdinger Equipment, Ltd.
- Provide a reasonable amount of labor needed for the Humdinger Equipment, Ltd. authorized repair facility to correct the defect at a labor rate that has been approved by Humdinger Equipment, Ltd.
- Compensate for a reasonable amount of normal parts freight.
- Compensate for a reasonable amount of travel time up to one and one half (1.5) hours per day per location

HUMDINGER EQUIPMENT, LTD. IS NOT RESPONSIBLE FOR DEFECTS FROM

- Abuse, accident, neglect and / or improper repair or storage.
- Any use or installation which Humdinger Equipment, Ltd. determines is improper.
- Repairs by other than a Humdinger Equipment, Ltd. authorized repair facility.
- Customer's unreasonable delay in making the Humdinger Equipment, Ltd. PRODUCT available after being aware of a potential product problem.
- Any parts or accessories installed on a Humdinger Equipment, Ltd. PRODUCT which were not manufactured, recommended or installed by Humdinger Equipment, Ltd. Claims in this regard shall be make solely to the respective manufacturer.

CUSTOMER RESPONSIBILITIES

- PRODUCTS with known failed or defective parts must be taken out of service as soon as possible to avoid contingent damage.
- Expenses to investigate or troubleshoot complaints, unless the problem is caused by a defect in Humdinger Equipment, Ltd. material or workmanship.
- Labor expenses, except as stated under HUMDINGER EQUIPMENT, LTD. RESPONSIBILITIES above.
- Parts shipping freight in excess of the usual and customary.
- Federal, state and local taxes, if applicable.
- Proper and timely maintenance and periodic inspection of the Humdinger Equipment, Ltd. PRODUCT as indicated in the operator's manual. The cost of routine or required maintenance and service is the responsibility of the customer. The customer is required to keep documented evidence of when and by whom maintenance service is performed.

TIRE WARRANTY

- Tire warranty must be submitted directly with the tire manufacturer or their local distributor.
- Humdinger Equipment will assist customer in identifying the appropriate contact for submitting claims in their area.

WARRANTY LIMITATIONS AND DISCLAIMERS

Humdinger Equipment, Ltd. reserves the right to make changes in the design of products and make improvements to products without incurring any obligation to incorporate such design changes or improvements in any product in process at Humdinger Equipment, Ltd or any product already shipped from Humdinger Equipment, Ltd.

The foregoing shall constitute the sold and exclusive remedy of any customer of a Humdinger Equipment, Ltd PRODUCT and the sole and exclusive responsibility of Humdinger Equipment, Ltd. and in lieu of all other warranties, expressed, implied or statutory, including but not limited to any implied warranty of merchantability, or fitness for a particular purpose. Humdinger Equipment, Ltd. neither assumes nor authorizes any person to assume for it any other obligation or responsibility in connection with this Humdinger Equipment, Ltd. PRODUCT warranty. In no event shall Humdinger Equipment, Ltd. be responsible for direct, indirect, special or consequential damages, or for any delay or any economic or commercial loss resulting from Humdinger Equipment, Ltd. performance or non-performance under this warranty. This warranty is expressly in lieu of all warranties, obligations or responsibilities of Humdinger Equipment, Ltd PRODUCT dealers or authorized agents, expressed, implied or statutory.

Warranty overage is not extended to repairs or parts and services required as a result of normal or accelerated wear and tear. Nor for periodic maintenance which is performed in accordance with published schedules.

No modifications to this warranty shall be valid and accepted by Humdinger Equipment, Ltd unless so stipulated in writing and executed by both Humdinger Equipment, Ltd. and the product owner.

3202 Clovis Road
Lubbock, Texas 79415
P 806-771-9944
TF 888-999-4909
F 806-771-9945

Revision: 1-1-2017

HUMDINGEREQUIPMENT.COM • TANA-NA.COM